ARCHITECTURAL SPECIFICATION DATA

DIVISION 1 - GENERAL REQUIREMENTS

01 1000 - SUMMARY

A. WORK COVERED BY THE CONTRACT DOCUMENTS:

1. PROJECT IDENTIFICATION: FLAGLER HOSPITAL
GS&P # 27432.00

2. OWNER: FLAGLER HOSPITAL

5. FLAGLER HOSPITAL
BUILDING OWNER'S
REPRESENTATIVE: PETER GLENN

B. USE OF PREMISES AND MISCELLANEOUS PROVISIONS:

1. THE WORK OF THIS CONTRACT INVOLVES INTERIOR SUITE DEVELOPMENT TO THE EXISTING FACILITY AND IT SHALL BE NECESSARY FOR THE CONTRACTOR TO COORDINATE ALL ON SITE OPERATIONS WITH THE BUILDING OWNER'S REPRESENTATIVES FOR OPERATIONS AND STORAGE OF MATERIALS. CONSTRUCTION SHALL BE CARRIED OUT SO AS NOT TO INTERFERE WITH CURRENT BUILDING OPERATIONS WITHIN OCCUPIED AREAS.

2. CONTRACTOR SHALL PROVIDE DAILY ON SITE CLEAN-UP OF CONSTRUCTION DEBRIS UNTIL TURNING SPACE OVER TO THE OWNER.

3. DISCREPANCIES IN CONTRACT DOCUMENTS: SHOULD DISCREPANCIES IN DIMENSIONS, DETAILS, ETC. OCCUR BETWEEN CONTRACT DOCUMENTS, CONTACT THE ARCHITECT, IN WRITING, FOR INTERPRETATION PRIOR TO PROCEEDING WITH THE WORK.

01 3300 - SUBMITTAL PROCEDURES

1.1. SUMMARY

A. ACTION SUBMITTALS: INFORMATION THAT REQUIRES ARCHITECT'S RESPONSIVE ACTION.

1.2. PROCEDURES

A. ELECTRONIC COPIES OF CAD DRAWINGS OF THE CONTRACT DOCUMENTS WILL NOT BE PROVIDED BY ARCHITECT FOR CONTRACTOR'S USE.

B. PROCESSING TIME:
1. INITIAL REVIEW: 14 CALENDAR DAYS.
2. RESUBMITTAL REVIEW: 14 CALENDAR DAYS.

C. TRANSMITTAL FORM: OWNER'S FORM

D. ACTION SUBMITTALS:
1. NUMBER OF COPIES: TWO - ARCHITECTURAL PRODUCTS; THREE - MECHANICAL, ELECTRICAL & PLUMBING PRODUCTS.
2. ACTION SUBMITTALS:
a. PRODUCT DATA.
b. SHOP DRAWINGS.
c. SAMPLES.
d. PRODUCT SCHEDULE OR LIST.

E. CONTRACTOR'S REVIEW:
1. SUBMITTALS: MARKED WITH CONTRACTOR'S APPROVAL STAMP AND SIGNED BEFORE SUBMITTING TO ARCHITECT.

F. REQUIRED SUBMITTALS:
1. SUBMITTALS REQUIRED FOR PROJECT: (SUBMIT TO ARCHITECT)
a. FLOORING
b. PAINT/ WALLCOVERING
c. CASEWORK SHOP DRAWINGS / FINISHES SAMPLES.
d. CERAMIC TILE.
e. LIGHTING FIXTURES
f. PLUMBING FIXTURES

01 3533 - INFECTION CONTROL REQUIREMENTS

1.1. SUMMARY

A. THIS SECTION INCLUDES INFECTION CONTROL REQUIREMENTS AND PROCEDURES, INCLUDING BUT NOT LIMITED TO, DUST BARRIERS, NEGATIVE AIR PRESSURE, DEBRIS REMOVAL, CONSTRUCTION PERSONNEL TRAFFIC, AND AIRFLOW AND FILTRATION REQUIREMENTS.

1.2. GENERAL INFECTION CONTROL REQUIREMENTS

A. THE PURPOSE OF THESE REQUIREMENTS IS TO PROTECT PATIENTS FROM ACQUIRING FUNGAL INFECTIONS ASSOCIATED WITH INHALING DUST. CEILINGS AND WALLS IN AREAS ADJACENT TO AND WITHIN OCCUPIED AREAS MUST BE SECURE AT ALL TIMES. IF ACCESS INTO THE CEILING IN OCCUPIED AREAS IS REQUIRED, PROCEDURES AS DESCRIBED HEREIN MUST BE FOLLOWED. AREAS TO BE PROTECTED INCLUDE ALL AREAS ADJACENT TO AND/OR CONNECTED TO VIA DUCT WORK THAT ARE OCCUPIED BY PATIENTS/STAFF.

1.3. GENERAL CEILING ACCESS DIRECTIVES

A. FOR "MINOR" WORK.
1. CONTRACTOR SHALL NOTIFY THE OWNER'S REPRESENTATIVE OF AREAS TO BE ACCESSED PRIOR TO START OF WORK.
2. USING A HEPA FILTERED VACUUM CLEANER, VACUUM DUST FROM TOP OF CEILING PANELS TO BE REMOVED, AS WELL AS FROM SURROUNDING PANELS, PRIOR TO PANEL REMOVAL.
3. CLEAN TOP OF ADJACENT CEILING PANELS AFTER WORK IS COMPLETE.
4. CLEAN FLOOR BELOW WORK AREA WHEN WORK IS COMPLETE.
5. RE-ROUTE TRAFFIC WITH BARRIERS AS REQUIRED SO THAT NO PATIENTS OR STAFF TRAVEL BELOW WORK AREA.
6. OWNER SHOULD BE CONTACTED FOR ALL CEILING ACCESS PROBLEMS.

1.4. PROTECTION OF OCCUPIED AREAS BELOW

A. IF THE SURFACE, BELOW THE AREA WHERE WORK IS OCCURRING, IS THE TOP OF THE LAY-IN CEILING AND/OR IF WORK ABOVE AN OCCUPIED SPACE BECOMES UNAVOIDABLE, PROVIDE TEMPORARY WORK SURFACES TO PROVIDE A SAFE WORKING PLATFORM, AND PROTECT THE CEILING AND THE SPACES BELOW FROM FALLING OBJECTS AND MATERIALS. TAKE ALL NECESSARY PRECAUTIONS TO PROTECT THE PEOPLE AND SPACES BELOW FROM INJURY DUE TO THE CONTRACTOR'S OPERATIONS.

B. EXERCISE CAUTION WHEN HANDLING FLUIDS, PARTICULARLY THE HEATING WATER, IN THE INTERSTITIAL SPACE. WHEN WORKING WITH FLUIDS PROVIDE A WATERTIGHT BARRIER BENEATH THE WORK AREA TO CATCH AND RETAIN ALL SPILLAGE BEFORE IT REACHES THE CEILING BELOW.

C. SHOULD A PATRICULAR OPERATION BE DEEMED TO POSE AN UNACCEPTABLE RISK TO PEOPLE BELOW, REVIEW AND SCHEDULE THIS OPERATION WITH THE OWNER'S REPRESENTATIVE TO MINIMIZE THE HAZARDS.

1.5. CONSTRUCTION SEPARATION REQUIREMENT - INFECTION CONTROL PROCEDURE AND PROTECTIVE ENCLOSURES AND BARRICADES

A. INSTALL DUSTPROOF ENCLOSURES FOR WORK AS INDICATED AND WHEN REQUIRED TO PROTECT AREAS OCCUPIED BY THE OWNER FROM DUST, DEBRIS AND DAMAGE.
1. INFECTION CONTROL IS CRITICAL IN ALL HOSPITAL AREAS SINCE MANY PATIENTS HAVE HIGH "AT-RISK" CONDITIONS. CONSTRUCTION MUST BE CONDUCTED IN TIGHT ENCLOSURES CUTTING OFF ANY FLOW OF PARTICLES INTO PATIENT AREAS.

B. REVIEW AND COMPLY WITH THE REQUIREMENTS OF THE OWNER'S "INFECTION CONTROL RISK ASSESSMENT(ICRA)"

C. IT IS THE CONTRACTOR'S RESPONSIBLITY TO DETERMINE WHEN A DUST PROOF ENCLOSURE IS REQUIRED TO PROTECT AN ADJOINING AREA; HOWEVER, THE CONTRACTOR SHALL PROVIDE A DUSTPROOF ENCLOSURE WHERE INDICATED AND WHENEVER REQUESTED BY THE OWNER.
1. COMPLY WITH THE SITE SPECIFIC CONSIDERATIONS/REQUIREMENTS OF THE OWNER'S ICRA

D. INFECTION CONTROL GENERAL REQUIREMENTS: PROVIDE FLOOR TO STRUCTURE, AIR-TIGHT BARRIERS CONSTRUCTED AS SPECIFIED IN THIS SECTION.
1. TRAFFIC BETWEEN BARRICADE AREAS AND OPEN AREAS SHALL BE KEPT TO A MINIMUM. KEEP DOOR TO SUCH AREAS CLOSED AT ALL TIMES. TRANSPORT MATERIALS AND REFUSE INTO AREA FROM AN EXTERNAL SITE, WITHOUT VIOLATING PATIENT CARE AREA, BY TRANSPORTING IN COVERED CONTAINERS.
2. PROVIDE NEGATIVE AIR PRESSURE IN CONSTRUCTION AREA BY BLOCKING SUPPLY VENTILATION IN DUST TIGHT MANNER AND EITHER BY HEPA FILTRATION OF THE EXISTING RETURN VENTILATION DUCTS OR BY USING A NEGATIVE AIR MACHINE, AS SPECIFIED IN THIS SECTION. DO NOT RECIRCULATE AIR FROM CONSTRUCTION AREA TO REMAINDER OF HOSPITAL.
a. PROVIDE ADEQUATE FORCED VENTILATION OF ENCLOSED AREAS TO CURE INSTALLED MATERIALS, TO PREVENT EXCESSIVE HUMIDITY, AND TO PREVENT HAZARDOUS ACCUMULATIONS OF DUST, FUMES, VAPORS OR GASES.

E. ALL BARRICADED CONSTRUCTION AREAS SHALL BE VENTILATED BY USE OF NEGATIVE AIR MACHINES EXHAUSTED THROUGH FILTERS TO THE OUTSIDE OF THE BUILDING. NEGATIVE AIR MACHINES SHALL BE MICRO-TRAP 2000 NEGATIVE AIR FILTRATION UNITS BY M-TEC CORPORATION, 1300 W. STEEL ROAD, UNIT #2, MORRISVILLE, PENNSYLVANIA 19067, OR COMPARABLE PRODUCT.
1. FILTERS SHALL BE CHANGED DAILY DURING DEMOLITION AND SHALL FILTER PARTICLES TO 0.12 MICRONS. CONTRACTOR SHALL PROVIDE A MINIMUM OF TWO NEGATIVE AIR MACHINES AND SHALL CEASE ANY DEMOLITION IN AREAS NOT SERVICED BY NEGATIVE AIR MACHINES. MAINTAIN AIR FLOW OF APPROXIMATELY 100 F.P.M. AT BARRICADE ENTRANCE DOOR OPENINGS.
2. VENT NEGATIVE AIR MACHINES TO OUTSIDE BY REMOVING EXISTING WINDOWS AND REPLACING THEM WITH VENTED SHEET METAL PANELS.
3. PROVIDE CONSTANT MONITOR TO ENSURE NEGATIVE AIR PRESSURE IS MAINTAINED.

F. PROVIDE ALL BARRICADES, WARNING SIGNS AND WARNING LIGHTS TO PROTECT THE PUBLIC, THE EXISTING BUILDING, STORAGE AREAS AND MATERIALS OR EQUIPMENT. BARRICADES SHALL BE APPROVED BY OWNER.

G. CONSTRUCTION BARRIERS: OBTAIN OWNER'S APPROVAL OF EXACT LOCATION OF BARRIERS. MATERIALS FOR BARRICADES AND BARRIERS MUST BE PRECUT IN AN UNOCCUPIED AREA. NO POWER DRIVEN FASTENERS ARE ALLOWED.
1. PARTITIONS: MINIMUM 1-HOUR FIRE RATED GYPSUM BOARD ON METAL STUDS, WITH 1-1/2 INCH R11 INSULATION BATTS TO REDUCE NOISE. PARTITIONS SHALL EXTEND TO BOTTOM OF CEILING OR TO BOTTOM OF DECK, WHERE THERE IS NO CEILING. SEAL PARTITION JOINTS AND PERIMETER. PROVIDE POLYETHYLENE BARRIERS ABOVE CEILINGS, COMPLYING WITH NFPA 701, OVERLAP AND TAPE FULL LENGTH OF JOIST. PAINT OCCUPIED SIDE OF PARTITIONS.
2. CONSTRUCT VESTIBULE AND AIRLOCK AT EACH ENTRANCE THROUGH PARTITION BARRIER WITH NOT LESS THAN 48 INCHES BETWEEN DOORS. PROVIDE CARPETS OR ADHESIVE MATS INSIDE VESTIBULE AND INSIDE BARRIER PARTITION AT DOOR TO VESTIBULE.
a. DOORS: 3'-0" MINIMUM WIDTH, WITH MINIMUM 20 MINUTE LABEL, SOLID CORE WOOD WITH METAL FRAME AND HARDWARE, INCLUDING CLOSER, TIGHTLY WEATHER-STRIPPED TO PREVENT FLOW OF DUST. SWING DOORS INTO CONSTRUCTION AREA. KEEP BARRIERS LOCKED DURING NON-WORKING HOURS. FURNISH THREE KEYS FOR EMERGENCY ACCESS TO THE OWNER.
3. PROVIDE CONSTRUCTION SIGNS ON ALL DOORS IN TEMPORARY WALLS STATING "DO NOT ENTER-CONSTRUCTION AREA-AUTHORIZED PERSONNEL ONLY".

H. REMODELING WORK IN CERTAIN ROOMS WHICH SERVE OTHER ROOMS, MUST BE COORDINATED AND PHASED IN WITH THE PHASING OF THE REMODELED ROOMS IF REQURED, SO THAT AT NO TIME ARE BOTH ROOMS SIMULTANEOUSLY INOPERATIVE. ANY DOWNTIME NECESSITATED BY THE REMODELING WORK SHALL BE FULLY DISCUSSED AND COORDINATED WITH THE OWNER'S REPRESENTATIVE IN ADVANCE OF THE SHUTDOWN.
1. DUST: GENERATION OF SIGNIFICANT QUANTITIES OF AIRBORNE DUST WILL NOT BE TOLERATED. CLEAN THE WORK AREA PRIOR TO STARTING WORK AS NECESSARY TO CONTAIN DUST AND DEBRIS GENERATED BY THE WORK.
2. HOT PROCESSES: HOT PROCESSES, PARTICULARLY WELDING AND FLAME CUTTING, WHICH GENERATE SIGNIFICANT QUANTITIES OF SMOKE POSE A SPECIAL CONCERN. THESE PROCESSES HAVE THE POTENTIAL OF SETTING OFF THE BUILDING FIRE ALARM SYSTEM WHICH AUTOMATICALLY CALLS THE FIRE DEPARTMENT AS WELL AS DISRUPTING THE OWNER'S OPERATIONS. THEREFORE, ALL WORK INVOLVING HOT PROCESSES MUST BE SCHEDULED WITH THE OWNER'S SYSTEM DEACTIVATED.

01 7310 - CUTTING AND PATCHING

1.1. SUMMARY

A. CUTTING AND PATCHING REQUIRED BY THE FOLLOWING:
1. INSTALLATION OF OTHER MATERIALS.
2. FINISHING.
3. ALTERNATIONS.
4. TESTS AND INSPECTIONS.

1.2. IN-PLACE MATERIALS

A. PROVIDE TEMPORARY SUPPORTS FOR WORK TO BE CUT. DO NOT CUT STRUCTURAL ELEMENTS UNTIL SUCH STEPS HAVE BEEN TAKEN TO PROTECT AGAINST ANY LOSS OF STRUCTURAL INTEGRITY.

B. EXISTING UTILITY SERVICES AND MECHANICAL/ELECTRICAL SYSTEMS: SERVICES/SYSTEMS BYPASSED BEFORE CUTTING TO PREVENT INTERRUPTION TO OCCUPIED AREAS.

C. CUTTING: UTILIZE CUTTING METHODS THAT WILL PROVIDE THE LEAST DISTURBANCE OF EXISTING ELEMENTS TO REMAIN AND OCCUPIED ADJACENT AREAS.

D. PATCHING: PATCH WITH DURABLE SEAMS THAT ARE UNDETECTABLE IN THE FINISHED WORK. RESTORE EXPOSED FINISHES AND EXTEND PATCHING OPERATIONS FROM OFFSET TO OFFSET INTO THE AREA BEING RETAINED TO ELIMINATE EVIDENCE OF PATCHING AND REFINISHING.

01 7320 - SELECTIVE DEMOLITION

1.1. SUMMARY

A. DEMOLITION AND REMOVAL OF PORTIONS OF BUILDING INTERIOR.

1.2. PROJECT CONDITIONS

A. HAZARDOUS MATERIALS: NOT EXPECTED TO BE ENCOUNTERED.

1.3. EXECUTION

A. UTILITY SERVICES: MAINTAINED TO OCCUPIED FACILITIES.
1. NOTICE TO OWNER OF SERVICE SHUTDOWN: 72 HOURS.
2. SHUTOFF: COORDINATION BETWEEN OWNER AND CONTRACTOR.

B. TEMPORARY FACILITIES
1. TEMPORARY BARRICADES TO PREVENT INJURY TO PEOPLE.
2. PROTECTION OF EXISTING FINISH WORK TO REMAIN.

01 7320 - SELECTIVE DEMOLITION (CONT.)

C. TEMPORARY SHORING.
D. DUST CONTROL.
E. REMOVED AND SALVAGED ITEMS: CLEANED, CRATED, STORED, AND TRANSPORTED TO OWNER'S STORAGE AREA.
F. REMOVED AND REINSTALLED ITEMS: CLEANED, REPAIRED, CRATED, STORED, AND REINSTALLED.
G. EXISTING ITEMS TO REMAIN: EXISTING CONSTRUCTION PROTECTED AGAINST DAMAGE.
H. DISPOSAL OF DEMOLISHED ITEMS:
1. DISPOSAL: AT DESIGNATED AREAS ON OWNER'S PROPERTY PER OWNERS INSTRUCTIONS.
2. APPROPRIATELY DISPOSE OF ALL DEMOLISHED MATERIALS IN ACCORDANCE W/ LOCAL, STATE & FEDERAL REGULATIONS

DIVISION 3 - CONCRETE

03 5416 - CEMENT BASED UNDERLAYMENT

1.1. SUMMARY

A. CEMENT-BASED, SELF-LEVELING UNDERLAYMENT FOR INTERIOR FINISH FLOORING OVER CONCRETE SUBSTRATES. GYPSUM BASED PRODUCTS ARE NOT ALLOWED.

1.2. MATERIALS

A. COMPREHENSIVE STRENGTH (28 DAYS): NOT LESS THAN 4100 PSI (28 MPA).

1.3. INSTALLATION

A. INSTALL TO MINIMUM & MAXIMUM THICKNESSES INDICATED IN MANUFACTURERS WRITTEN INSTRUCTIONS.

DIVISION 5 - METALS

05 5000 - METAL FABRICATION

1.1. SUMMARY

A. MISCELLANEOUS METAL FRAMING AND SUPPORTS.

B. LOOSE METAL PLATES AND SHAPES.

C. MISCELLANEOUS FABRICATED METAL ITEMS.

1.2. PRODUCTS

A. MATERIALS: STEEL PLATES, SHAPES, AND BARS. STAINLESS STEEL PLATES, SHAPES AND BARS.

B. MISCELLANEOUS FRAMING AND SUPPORTS:
1. STEEL FRAMING AND SUPPORTS OF REQUIRED FOR COUNTERTOPS, MECHANICAL AND ELECTRICAL EQUIPMENT, APPLICATIONS WHERE FRAMING AND SUPPORTS ARE NOT SPECIFIED IN OTHER SECTIONS.

C. STEEL PLATES, SHAPES AND BARS: ASTM A36/A36M.

D. STAINLESS STEEL SHEET, STRIP, PLATE, AND FLAT BARS: ASTM A66, TYPE 304.

E. EXPOSED METAL SURFACES SHALL BE FREE OF BLEMISHES AND ROUGHNESS.

F. SELECT FASTENERS OF TYPE, GRADE AND CLASS REQUIRED. ZINC-PLATED FASTENERS WITH COATING COMPLYING WITH ASTM B 633, CLASS FE/ZN5, WHERE BUILT INTO EXTERIOR WALLS.

G. SHOP COAT ALL MISCELLANEOUS STEEL WITH RUST INHIBITIVE PRIMER.

H. HOT DIP GALVANIZE ALL EXTERIOR FERROUS METALS.

DIVISION 6 - WOOD AND PLASTICS

06 4600 - WOOD TRIM

PART 1 - GENERAL
1.1 SUMMARY
A. THIS SECTION INCLUDES THE FOLLOWING:
1. INTERIOR STANDING AND RUNNING TRIM FOR TRANSPARENT FINISH
1.2 QUALITY ASSURANCE
A. FABRICATOR QUALIFICATIONS: CERTIFIED PARTICIPANT IN AWI'S QUALITY CERTIFICATION PROGRAM.

PART 2 - PRODUCTS
2.1 INTERIOR STANDING AND RUNNING TRIM FOR TRANSPARENT FINISH
A. GRADE: CUSTOM
B. WOOD SPECIES AND CUT: MATCH SPECIES AND CUT IN ADJOINING DEPARTMENT.
1. CUT: PLAIN
2.2 MATERIALS
A. ADHESIVES: UREA FORMALDEHYDE FREE

PART 3 - EXECUTION
3.1 SHOP FINISHING
A. GRADE: SAME GRADE AS WOODWORK
B. EXTENT: ALL WOOD TRIM SHOP FINISHED.

DIVISION 7 - THERMAL & MOISTURE PROTECT.

07 9200- JOINT SEALANTS

1.1. SUMMARY
A. JOINTS IN VERTICAL SURFACES AND HORIZONTAL SURFACES:
1. PERIMETER JOINTS AROUND FRAMES OF DOORS AND WINDOWS
B. ACCESSORIES:
1. JOINTS BETWEEN PLUMBING FIXTURES AND ADJOINING WALLS, FLOORS AND COUNTERS

1.2. MATERIALS
A. LATEX JOINT SEALANTS: ASTM C 834 TYPE P, GRADE NF
B. ACOUSTICAL JOINT SEALANTS: LATEX

1.3. INSTALLATION:
A. COMPLY WITH JOINT - SEALANT MANUFACTURER'S WRITTEN INSTALLATION INSTRUCTIONS, UNLESS MORE STRINGENT REQUIREMENTS APPLY.
B. ASTM C 1193, ASTM C 919

DIVISION 9 - FINISHES

09 2900 - GYPSUM BOARD ASSEMBLIES

1.1. SUMMARY

A. INTERIOR GYPSUM WALL BOARD.

1.2. MATERIALS

A. INTERIOR GYPSUM WALL BOARD
1. REGULAR TYPE: ⅝".
2. 5/8" TYPE X.
3. CEILING TYPE: SAG RESISTANCE 5/8" EDGES TAPERED
4. MOISTURE & MOLD RESISTANT TYPE WITH MOISTURE AND MOLD RESISTANT CORE AND SURFACES 5/8" TYPE X

B. TILE BACKING PANELS
1. CEMENTITOUS BACKER UNITS 5/8": ANSI A118.9

C. TRIM ACCESSORIES
1. MATERIAL: PAPER-FACED GALVANIZED STEEL SHEET.
2. SHAPES:
a. CORNERBEAD: USE AT OUTSIDE CORNERS, UNLESS OTHERWISE INDICATED.
b. LC-BEAD: J-SHAPED; EXPOSED LONG FLANGE RECEIVES JOINT COMPOUND; USE AT EXPOSED PANEL EDGES.
c. CONTROL JOINT: USE AS SPECIFIED.
d. CURVED-EDGE CORNERBEAD: WITH NOTCHED OR FLEXIBLE FLANGES; USE AT CURVED OPENINGS.

D. JOINT TREATMENT MATERIALS
1. GENERAL: COMPLY WITH ASTM C 475.
2. JOINT TAPE:
a. INTERIOR GYPSUM WALL BOARD: PAPER.

E. JOINT COMPOUND FOR INTERIOR GYPSUM WALL BOARD: FOR EACH COAT USE FORMULATION THAT IS COMPATIBLE WITH OTHER COMPOUNDS APPLIED ON PREVIOUS OR FOR SUCCESSIVE COATS.
1. PREFILLING: AT OPEN JOINTS AND DAMAGED SURFACE AREAS, USE SETTING-TYPE TAPING COMPOUND.
2. EMBEDDING AND FIRST COAT: FOR EMBEDDING TAPE AND FIRST COAT ON JOINTS, FASTENERS, AND TRIM FLANGES, USE DRYING-TYPE, ALL-PURPOSE COMPOUND.
a. USE SETTING-TYPE COMPOUND FOR INSTALLING PAPER-FACED METAL TRIM ACCESSORIES.
3. FILL COAT: FOR SECOND COAT, USE DRYING-TYPE, ALL-PURPOSE COMPOUND.
4. FINISH COAT: FOR THIRD COAT, USE DRYING-TYPE, ALL-PURPOSE COMPOUND.
5. SKIM COAT: FOR FINAL COAT OF LEVEL 5 FINISH, USE DRYING-TYPE, ALL-PURPOSE COMPOUND.

F. SOUND ATTENUATION BLANKETS: ASTM C 665, TYPE 1 (BLANKETS WITHOUT MEMBRANE FACING).
1. WALLS:
a. FIRE-RESISTANCE-RATED ASSEMBLIES: COMPLY WITH MINERAL-FIBER REQUIREMENTS OF ASSEMBLY.
b. THICKNESS: 3½".
2. CEILING:
a. THICKNESS 3½" SURFACE BURNING CHARACTERISTICS, FLAME SPREAD 0-10 SMOKE DEVELOPMENT 0-10.

1.3. INSTALLATION:
A. STEEL PARTITION FRAMING: 16" O.C.
B. FIRE-RESISTANCE RATED ASSEMBLIES: COMPLY WITH REQUIREMENTS OF UL DESIGN
C. SAG RESISTANCE GYPSUM BOARD SHALL BE INSTALLED AT ALL SOFFIT CEILING LOCATIONS
D. MOISTURE RESISTANT GYPSUM BOARD SHALL BE INSTALLED AT ALL TOILET FIXTURE WALL LOCATIONS
E. CEMENTITIOUS BACKER UNITS: ANSI A108.11 AT SHOWER AREAS

09 3000 - TILING

PART 1 - GENERAL

1.1. SUMMARY
A. THIS SECTION INCLUDES PAVER TILE; WATERPROOF MEMBRANE; METAL EDGE STRIPS FOR TILE INSTALLATIONS.

1.2. SUBMITTALS
A. PRODUCT DATA: FOR EACH TYPE OF PRODUCT INDICATED.
B. SAMPLES FOR VERIFICATION: FULL-SIZED UNITS OF EACH TYPE AND COMPOSITION OF TILE AND FOR EACH COLOR AND FINISH REQUIRED. FULL-SIZED UNITS OF EACH TYPE OF TRIM.

PART 2 - PRODUCTS

2.1. PRODUCTS, GENERAL
A. ANSI CERAMIC TILE STANDARD: PROVIDE TILE THAT COMPLIES WITH ANSI A137.1, "SPECIFICATIONS FOR CERAMIC TILE," FOR TYPES, COMPOSITION AND OTHER CHARACTERISTICS INDICATED.
B. ANSI STANDARDS FOR TILE INSTALLATION MATERIALS: PROVIDE MATERIALS COMPLYING WITH ANSI A108.02, ANSI STANDARDS REFERENCED IN OTHER PART 2 ARTICLES, ANSI STANDARDS REFERENCED BY TCNA INSTALLATION METHODS SPECIFIED IN TILE INSTALLATION SCHEDULES, AND OTHER REQUIREMENTS SPECIFIED.
C. COLORS, TEXTURES AND PATTERNS: AS INDICATED BY MANUFACTURER'S DESIGNATIONS IN FINISH LEGEND AND SCHEDULE/PLAN.

2.2. TILE PRODUCTS
A. MANUFACTURERS: SEE INTERIOR FINISH LEGEND AND SCHEDULE/PLAN FOR SELECTED MANUFACTURER'S PRODUCTS AND COLORS SPECIFIED.
B. TILE TYPE (CT) CERAMIC TILE (CWT) CERAMIC WALL TILE: GLAZED PAVER TILE.
1. PORCELAIN
2. 13" x 13" NOMINAL
3. 3/8" THICK
4. MATTE FINISH
C. TILE TYPE (CTB) CERAMIC TILE BASE: GLAZED PAVER TILE.
1. PORCELAIN
2. 6" x 13" (NOMINAL) BULLNOSE
3. 3/8" THICK
4. MATTE FINISH
D. TILE COLOR AND PATTERN: AS INDICATED IN FINISH LEGEND AND SCHEDULE/PLAN.
E. GROUT: LATICRETE SPECTRA LOCK (LOW VOC) 3/16" WIDTH, COLOR: 61 PARCHMENT
F. TRIM UNITS: COORDINATED WITH SIZES AND COURSING OF ADJOINING FLAT TILE WHERE APPLICABLE.
1. INTERNAL CORNERS: FIELD-BUTTED SQUARE CORNERS.

2.3. WATERPROOF MEMBRANE
A. GENERAL: MANUFACTURER'S STANDARD PRODUCT THAT COMPLIES WITH ANSI A118.10 AND IS RECOMMENDED BY THE MANUFACTURER FOR THE APPLICATION INDICATED. INCLUDE REINFORCEMENT AND ACCESSORIES RECOMMENDED BY THE MANUFACTURER.

2.4 SETTING MATERIALS
A. LATEX-PORTLAND CEMENT MORTAR (THIN SET): ANSI A118.4.
1. MANUFACTURER'S: SUBJECT TO COMPLIANCE PROVIDE PRODUCTS BY ONE OF THE FOLLOWING:
a. C-CURE
b. LATICRETE INTERNATIONAL, INC.
c. MAPEI CORPORATION
d. TEC: A SUBSIDIARY OF H.B. FULLER COMPANY.
2. PROVIDE PREPACKAGED, DRY-MORTAR MIX COMBINED WITH ACRYLIC RESIN OR STYRENE-BUTADIENE-RUBBER LIQUID-LATEX ADDITIVE AT PROJECT SITE.
3. FOR WALL APPLICATIONS, PROVIDE MORTAR THAT COMPLIES WITH REQUIREMENTS FOR NONSAGGING MORTAR IN ADDITION TO THE OTHER REQUIREMENTS IN ANSI A118.4.

2.5 GROUT MATERIALS
A. POLYMER-MODIFIED TILE GROUT: ANSI A118.7.
1. MANUFACTURER'S: SUBJECT TO COMPLIANCE RPOVIDE PRODUCTS BY ONE OF THE FOLLOWING:
a. C-CURE
b. LATICRETE INTERNATIONAL, INC.
c. MAPEI CORPORATION.
d. TEC: A SUBSIDIARY OF H.B. FULLER COMPANY.

2.6 MISCELLANEOUS MATERIALS
A. METAL EDGE STRIPS: L-SHAPE, HEIGHT TO MATCH TILE AND SETTING-BED THICKNESS, METALLIC OR COMBINATION OF METAL AND PVC OR NEOPRENE BASE, DESIGNED SPECIFICALLY FOR FLOORING & WALL APPLICATIONS, ALUMINUM EXPOSED EDGE MATERIAL.
1. PRODUCTS:
a. SCHLUTER SYSTEMS; SCHLUTER-SCHIENE
B. METAL TRANSITION STRIPS: ANGLE TYPE, HEIGHT TO MATCH TILE AND SETTING BED THICKNESS, DESIGNED SPECIFICALLY FOR FLOORING APPLICATIONS, ANODIZED ALUMINUM EXPOSED-EDGE MATERIAL.
1. PRODUCTS:
a. SCHLUTER SYSTEMS; SCHLUTER-RENO-U
b. SCHLUTER SYSTEMS; SCHLUTER-RENO-TK
C. GROUT SEALER: MANUFACTURER'S STANDARD PRODUCT FOR SEALING GROUT JOINTS AND THAT DOES NOT CHANGE COLOR OR APPEARANCE OF GROUT.
1. PRODUCTS: SUBJECT TO COMPLIANCE WITH REQUIREMENTS, PROVIDE ONE OF THE FOLLOWING:
a. CUSTOM BUILDING PRODUCT; TILE LAB SURFACEGUARD PENETRATING SEALER.
b. TEC; A SUBSIDIARY OF H.B. FULLER COMPANY; GROUT GUARD PENETRATING SILICONE GROUT SEALER.

PART 3 - EXAMINATION

3.1 EXECUTION
A. EXAMINE SUBSTRATES, AREAS, AND CONDITIONS WHERE TILE WILL BE INSTALLED, WITH INSTALLER PRESENT, FOR COMPLIANCE WITH REQUIREMENTS FOR INSTALLATION TOLERANCES AND OTHER CONDITIONS AFFECTING PERFORMANCE OF INSTALLED TILE.
B. PROCEED WITH INSTALLATION ONLY AFTER UNSATISFACTORY CONDITIONS HAVE BEEN CORRECTED.

3.2 PREPARATION
A. FILL CRACKS, HOLES, AND DEPRESSIONS IN CONCRETE SUBSTRATES FOR TILE FLOORS INSTALLED WITH THIN-SET MORTAR WITH TROWELABLE LEVELING AND PATCHING COMPOUND SPECIFICALLY RECOMMEND BY TILE SETTING MATERIAL MANUFACTURER.
B. WHERE INDICATED, PREPARE SUBSTRATES TO RECEIVE WATERPROOFING BY APPLYING A REINFORCED MOTOR BED THAT COMPLIES WITH ANSI A108.1A AND IS SLOPED 1/4 INCH PER FOOT (1:50) TOWARD DRAINS.

3.3 TILE INSTALLATION
A. COMPLY WITH TCNA'S "HANDBOOK FOR CERAMIC TILE INSTALLATION" FOR TCNA INSTALLATION METHODS SPECIFIED IN TILE INSTALLATION SCHEDULES. COMPLY WITH PARTS OF THE ANSI A108 SERIES "SPECIFICATIONS FOR INSTALLATION OF CERAMIC TILE" THAT ARE REFERENCED IN TCNA INSTALLATION METHODS SPECIFIED IN TILE INSTALLATION SCHEDULES, AND APPLY TO TYPES OF SETTING AND GROUTING MATERIALS USED.
B. PROVIDE 95 PERCENT MOTOR COVERAGE FOR TILE FLOORS IN WET AREAS AND FLOORS COMPOSED OF TILES 8 X 8 INCHES OR LARGER.
C. EXTEND TILE WORK INTO RECESSES AND UNDER OR BEHIND EQUIPMENT AND FIXTURES TO FORM COMPLETE COVERING WITHOUT INTERRUPTIONS, UNLESS OTHERWISE INDICATED. TERMINATE WORK NEATLY AT OBSTRUCTIONS, EDGES, AND CORNERS WITHOUT DISRUPTING PATTERN OR JOINT ALIGNMENTS.
D. ACCURATELY FORM INTERSECTIONS AND RETURNS. PERFORM CUTTING AND DRILLING OF TILE WITHOUT MARRING VISIBLE SURFACES. CAREFULLY GRIND CUT EDGES OF TILE ABUTTING TRIM, FINISH, OR BUILT- IN ITEMS FOR STRAIGHT ALIGNED JOINTS. FIT TILE CLOSELY TO ELECTRICAL OUTLETS, PIPING, FIXTURES, AND OTHER PENETRATIONS SO PLATES, COLLARS, OR COVERS OVERLAP TILE.
E. JOINTING PATTERN: LAY TILE IN GRID PATTERN UNLESS OTHERWISE INDICATED. LAY OUT TILE WORK AND CENTER TILE FIELDS IN BOTH DIRECTIONS IN EACH SPACE OR ON EACH WALL AREA. LAY OUT TILE WORK TO MINIMIZE THE USE OF PIECES THAT ARE LESS THAN HALF A TILE. PROVIDE UNIFORM JOINT WIDTHS UNLESS OTHERWISE INDICATED.
F. JOINT WIDTHS: PAVER TILE: 1/4"
G. METAL EDGE STRIPS: INSTALL AT LOCATIONS WHERE EXPOSED EDGE OF TILE FLOORING MEETS CARPET, WOOD, OR OTHER FLOORING THAT FINISHES FLUSH WITH OR BELOW TOP OF TILE.
H. GROUT SEALER: APPLY GROUT SEALER TO GROUT JOINTS ACCORDING TO GROUT-SEALER MANUFACTURER'S WRITTEN INSTRUCTIONS.

3.4 WATERPROOFING INSTALLATION
A. INSTALL WATERPROOFING TO COMPLY WITH ANSI A108.13 AND WATERPROOFING MANUFACTURER'S WRITTEN INSTRUCTIONS TO PRODUCE WATERPROOF MEMBRANE OF UNIFORM THICKNESS AND BONDED SECURELY TO SUBSTRATE.
B. DO NOT INSTALL TILE OR SETTING MATERIALS OVER WATERPROOFING UNTIL WATERPROOFING HAS CURED AND BEEN TESTED TO DETERMINE THAT IT IS WATERTIGHT.

3.5 CLEANING AND PROTECTING
A. ON COMPLETION OF PLACEMENT AND GROUTING, CLEAN ALL CERAMIC TILE SURFACES SO THEY ARE FREE OF FOREIGN MATTER.

3.6 INTERIOR TILE INSTALLATION SCHEDULE
A. INTERIOR FLOOR INSTALLATIONS, CONCRETE SUBFLOOR:
1. TILE INSTALLATION F12: THIN-SET MORTAR ON WATERPROOFMEMBRANE; TCNA F122.
a. TILE TYPE: CT
b. THIN-SET MORTAR: LATEX-PORTMAND CEMENT MORTAR.
c. GROUT: PLYMER-MODIFIED SANDED GROUT.
B. INTERIOR WALL INSTALLATIONS, METAL STUDS OR FURRING:
1. TILE INSTALLATION W244: THIN-SET MORTAR ON CEMENTITIOUS BACKER UNITS OR FIBER CEMENT UNDERLAYMENT; TCNA W244.
a. TILE TYPE: WT AND/OR CTB
b. THIN-SET MORTAR: LATEX-PORTMAND CEMENT MORTAR.
c. GROUT: PLYMER-MODIFIED SANDED GROUT.

G S & P ®
Design Services For The Built Environment

Atlanta
Birmingham
Charlotte
Cincinnati
Columbus
Dallas
Fort Lauderdale
Knoxville
Jackson
Jacksonville
Louisville
Memphis
Nashville
Richmond
Tampa

GRESHAM SMITH AND PARTNERS
5220 Belfort Road
Suite 100
Jacksonville, FL 32256
904.332.6699
FIRM'S FLORIDA CERT. NO.
AAP000034/EB0003806
IB26000797

FLAGLER HOSPITAL
Excellence As A Way Of Life

IS PHASE II

CONSTRUCTION DOCUMENTS

SEAL:

HILLARY MCDONALD
ID 5463

REVISION		
No. -	Date -	Revision

ARCHITECTURAL SPECIFICATIONS

A9.1

PROJECT: 28477.01
DATE: AUGUST 31, 2012

Drawn By:
Checked By:
Approved By:

LEV $LNM1$ $LNM2$ $LNM3$ $LNM4$ $LNM5$
DGN $SYTIME$ $DISPLAY$ $FENCE$ $PROJECT$ $WORK$ Pages: $PAGE$ $REF1$ $REF2$ $REF3$ $REF4$ $REF5$
$INSTR$ $PLOTTER$ $DATE$ $TIME$ $SCALE$ FBL PRF TBL
$USER$

ARCHITECTURAL SPECIFICATION DATA

DIVISION 9 - FINISHES

09 5123 - ACOUSTICAL PANEL CEILINGS

1.1. SUMMARY
- A. ACOUSTICAL PANELS AND EXPOSED SUSPENSION SYSTEMS.

1.2. PRODUCTS
- A. ARMSTRONG ULTIMA BEVELED TEGULAR 1911 ACT-1:
  1. CLASSIFICATION: CLASS A; TYPE IV; FORM 2, PATTERN E.
  2. COLOR: WHITE.
  3. NRC: .70
  4. CAC: 35
  5. EDGE/JOINT DETAIL: TEGULAR
  6. THICKNESS: 3/4"
  7. MODULAR SIZE: 24 BY 24 INCHES
  8. ANTIMICROBIAL TREATMENT: MANUFACTURER'S STANDARD

1.3. METAL SUSPENSION SYSTEM FOR ACOUSTICAL PANEL CEILING:
- A. CEILING GRID FOR ACT-1
  1. ARMSTRONG WORLD INDUSTRIES, INC.: PRELUDE XL 15/16 INCH.
  2. STRUCTURAL CLASSIFICATION: INTERMEDIATE-DUTY SYSTEM.
  3. END CONDITION OF CROSS-RUNNERS: FLUSH FIT.
  4. FACE DESIGN: FLAT, FLUSH.
  5. CAP MATERIAL: STEEL, COLD-ROLLED SHEET.
  6. CAP FINISH: PAINTED WHITE.

1.4. INSTALLATION
- A. GENERAL: INSTALL ACOUSTICAL PANEL CEILINGS TO COMPLY WITH REQUIREMENTS INDICATED, PER MANUFACTURER'S WRITTEN INSTRUCTIONS AND CISCA'S "CEILING SYSTEMS HANDBOOK."
  1. INSTALL HANGERS PLUMB AND FREE FROM CONTACT WITH INSULATION OR OTHER OBJECTS WITHIN CEILING PLENUM THAT ARE NOT PART OF SUPPORTING STRUCTURE OR OF CEILING SUSPENSION SYSTEM.
  2. SECURE BRACING WIRES TO CEILING SUSPENSION MEMBERS AND TO SUPPORTS WITH A MINIMUM OF FOUR TIGHT TURNS. SUSPEND BRACING FROM BUILDING'S STRUCTURAL MEMBERS AS REQUIRED FOR HANGERS, WITHOUT ATTACHING TO PERMANENT METAL FORMS, STEEL DECK, OR STEEL DECK TABS. FASTEN BRACING WIRES INTO CONCRETE WITH CAST-IN-PLACE OR POST-INSTALLED ANCHORS.
  3. INSTALL EDGE MOLDINGS AND TRIM OF TYPE INDICATED AT PERIMETER OF ACOUSTICAL CEILING AREA AND WHERE NECESSARY TO CONCEAL EDGES OF ACOUSTICAL PANELS. EDGE MOLD GAPS BETWEEN WALL SURFACE SHALL NOT EXCEED 1/16".
  4. INSTALL PANELS WITH EDGES FULLY HIDDEN FROM VIEW BY FLANGES OF SUSPENSION SYSTEM RUNNERS AND MOLDINGS.
  5. PAINT CUT EDGES OF PANEL REMAINING EXPOSED AFTER INSTALLATION; MATCH COLOR OF EXPOSED PANEL SURFACES USING COATING RECOMMENDED IN WRITING FOR THIS PURPOSE BY ACOUSTICAL PANEL MANUFACTURER. CUT EDGES SHALL BE POSITIONED AWAY FROM VIEW TO THE EXTENT POSSIBLE.
  6. LIGHT FIXTURES SHALL BE HUNG INDEPENDENT OF CEILING GRID
     2' X 2' FIXTURES @ DIAGONAL CORNERS
     2' X 4' FIXTURES @ ALL FOUR CORNERS

09 6513 - RESILIENT WALL BASE AND ACCESSORIES

1.1. SUMMARY
- A. RESILIENT BASE.

1.2. RESILIENT BASE (RUB-1)
- A. RESILIENT BASE STANDARD ASTM F 1861
  1. PROVIDE JOHNSONITE MILLWORK - REVEAL PROFILE - MW-ACH-F
  2. MATERIAL REQUIREMENT: TYPE TV (VINYL, THERMOPLASTIC).
  3. MANUFACTURING METHOD: GROUP 1, SOLID.
  4. STYLE: COVE (BASE WITH TOE).
- B. THICKNESS: .1/4".
- C. WEARING SURFACE: SMOOTH.
- D. HEIGHT: 4 1/4 INCHES
- E. LENGTHS: 120'
- F. OUTSIDE CORNERS: JOB FORMED (MITER). (PRE FAB OUTSIDE CORNERS NOT ACCEPTABLE)
- G. INSIDE CORNERS: JOB FORMED. (PRE FAB INSIDE CORNERS NOT ACCEPTABLE.)
- H. FINISH: SATIN.

1.3. RESILIENT BASE (RUB-2)
- A. RESILIENT BASE STANDARD ASTM F 1861
  1. PROVIDE JOHNSONITE WALL BASE
  2. MATERIAL REQUIREMENT: TYPE TV (VINYL, THERMOPLASTIC).
  3. MANUFACTURING METHOD: GROUP 1, SOLID.
  4. STYLE: COVE (BASE WITH TOE).
- B. THICKNESS: .1/4".
- C. WEARING SURFACE: SMOOTH.
- D. HEIGHT: 4 INCHES
- E. LENGTHS: 120'
- F. OUTSIDE CORNERS: JOB FORMED (MITER). (PRE FAB OUTSIDE CORNERS NOT ACCEPTABLE)
- G. INSIDE CORNERS: JOB FORMED. (PRE FAB INSIDE CORNERS NOT ACCEPTABLE.)
- H. FINISH: SATIN.

1.4. INSTALLATION
- A. COMPLY WITH MANUFACTURER'S WRITTEN INSTRUCTIONS FOR INSTALLING RESILIENT BASE
- B. APPLY RESILIENT BASE TO WALLS, COLUMNS, PILASTERS, CASEWORK, AND CABINETS IN TOE SPACES, AND OTHER PERMANENT FIXTURES IN ROOMS AND AREAS WHERE BASE IS REQUIRED.
- C. INSTALL RESILIENT BASE LENGTHS AS LONG AS PRACTICABLE WITHOUT GAPS AT SEAMS AND WITH TOPS OF ADJACENT PIECES ALIGNED.
- D. TIGHTLY ADHERE RESILIENT BASE TO SUBSTRATE THROUGHOUT LENGTH OF EACH PIECE, WITH BASE IN CONTINUOUS CONTACT WITH HORIZONTAL AND VERTICAL SUBSTRATES.
- E. DO NOT STRETCH RESILIENT BASE DURING INSTALLATION.
- F. JOB-FORMED CORNERS:
  1. OUTSIDE CORNERS: USE STRAIGHT PIECES OF MAXIMUM LENGTHS POSSIBLE. FORM WITHOUT PRODUCING DISCOLORATION (WHITENING) AT BENDS.
  2. INSIDE CORNERS: USE STRAIGHT PIECES OF MAXIMUM LENGTHS POSSIBLE.

09 6813 - TILE CARPETING

1.1 WARRANTY
- A. CARPET TILE FAILURE: 10 YEARS.

1.2 PRODUCTS
- A. CARPET TILE CPT-1:
  1. FIBER: 90% SOLUTION DYED / 10% YARN DYED
  2. PILE CHARACTERISTIC: TUFTED TEXTURED LOOP PILE.
  3. DENSITY: 8082.
  4. PILE THICKNESS: .098 INCHES.
  5. TOTAL WEIGHT: 22 OZ./SQ. YD.
  6. SIZE: 24 BY 24 INCHES.
- B. INSTALLATION ADHESIVE: VOC CONTENT 50 G/L OR LESS.

09 9123 - INTERIOR PAINTING

PART 1 - GENERAL

1.1. SUMMARY
- A. THIS SECTION INCLUDES SURFACE PREPARATION AND THE APPLICATION OF PAINT SYSTEMS ON THE FOLLOWING INTERIOR SUBSTRATES AND STENCILING FIRE AND SMOKE WALLS ABOVE CEILINGS:
  1. CONCRETE MASONRY UNITS (CMU)
  2. GYPSUM BOARD.
  3. GALVANIZED METAL.
  4. WOOD.

1.2. SUBMITTALS
- A. PRODUCT DATA: FOR EACH TYPE OF PRODUCT INDICATED.
- B. SAMPLES FOR VERIFICATION: FOR EACH TYPE OF PAINT SYSTEM AND IN EACH COLOR AND GLOSS OF TOPCOAT INDICATED.
  1. SUBMIT SAMPLES ON RIGID BACKING, 8 INCHES SQUARE.

PART 2 - PRODUCTS

2.1. PAINT, GENERAL
- A. MATERIAL COMPATIBILITY:
  1. PROVIDE MATERIALS FOR USE WITHIN EACH PAINT SYSTEM THAT ARE COMPATIBLE WITH ONE ANOTHER AND SUBSTRATES INDICATED, UNDER CONDITIONS OF SERVICE AND APPLICATION AS DEMONSTRATED BY MANUFACTURER, BASED ON TESTING AND FIELD EXPERIENCE.

2.2. PRIMERS/SEALERS
- A. INTERIOR LATEX PRIMER/SEALER: WHITE, PIGMENTED, WATERBORNE LATEX SEALER USED ON NEW INTERIOR PLASTER, CONCRETE AND GYPSUM WALLBOARD SURFACES.
  1. ICI PAINTS; PREP-N-PRIME INTERIOR LATEX WALL PRIMER NO. 1000-1200.
- B. WATERBORNE GALVANIZED-METAL PRIMER: WATERBORNE METAL PRIMER, COMPOSED OF ANTICORROSIVE PIGMENTS AND ACRYLIC RESINS, FOR CLEANED/ETCHED GALVANIZED METAL.
  1. ICI PAINTS; DEVOE COATINGS DEVFLEX WB DTM PRIMER FINISH NO. 90-712.

2.3. LATEX PAINTS
- A. INSTITUTIONAL LOW-ODOR/VOC LATEX (FLAT): WHITE OR COLORED.
  1. ICI PAINTS; CIL SELECT-INT. ACRYLIC VELVET FLAT NO. 7100.
- B. HIGH-PERFORMANCE ARCHITECTURAL LATEX (SEMIGLOSS): HIGH PERFORMANCE ARCHITECTURAL LATEX COATING, GLOSS LEVEL 5 - SEMI-GLOSS.
  1. ICI PAINTS; DULUX PROFESSIONAL SEMI-GLOSS INT. WALL AND TRIM ENAMEL NO. 1406-0110.
- C. HIGH PERFORMANCE ARCHITECTURAL LATEX (LOW SHEEN):
  1. ICI PAINTS; ICI DULUX INT. ACRYLIC LOW SHEEN EGGSHELL NO. 14030.

2.4. WOOD PRIMERS
- A. INTERIOR LATEX-BASED WOOD PRIMER:
  1. ICI PAINTS; PREP-N-PRIME 100% ACRYLIC LATEX PRIMER NO. 2000-1200.

2.5. FLOOR COATINGS
- A. INTERIOR/EXTERIOR CLEAR CONCRETE FLOOR SEALER (WATERBASED)
  1. PPG; PERMA-CRETE PLEX-SEAL WB NO. 46200 (OR COMPARABLE EQUAL)

2.6. EPOXY PAINTS
- A. INTERIOR/EXTERIOR EPOXY WB
  1. ICI PAINTS; DEVOE COATINGS TRU GLAZE ACRYLIC EPOXY COATING NO. 4418.

PART 3 - EXECUTION

3.1. APPLICATION
- A. APPLY PAINTS ACCORDING TO MANUFACTURER'S WRITTEN INSTRUCTIONS.
  1. USE APPLICATORS AND TECHNIQUES SUITED FOR PAINT AND SUBSTRATE INDICATED.
  2. PAINT SURFACES BEHIND MOVABLE EQUIPMENT AND FURNITURE SAME AS SIMILAR EXPOSED SURFACES. BEFORE FINAL INSTALLATION, PAINT SURFACES BEHIND PERMANENTLY FIXED EQUIPMENT OR FURNITURE WITH PRIME COAT ONLY.
  3. PAINT FRONT AND BACKSIDES OF ACCESS PANELS, REMOVABLE OR HINGED COVERS, AND SIMILAR HINGED ITEMS TO MATCH EXPOSED SURFACES.
  4. WHERE WALL BASE WILL BE INSTALLED, EXTEND PAINT NO MORE THAN 1/2 INCH BELOW TOP OF BASE.

09 9123 - INTERIOR PAINTING (CONTINUED)

3.2. INTERIOR PAINTING SCHEDULE
- A. DRESSED LUMBER SUBSTRATES
  1. HIGH-PERFORMANCE ARCHITECTURAL LATEX SYSTEM:
     - a. PRIME COAT: INTERIOR LATEX-BASED WOOD PRIMER.
     - b. INTERMEDIATE COAT: HIGH-PERFORMANCE ARCHITECTURAL LATEX MATCHING TOPCOAT.
     - c. TOPCOAT: HIGH-PERFORMANCE ARCHITECTURAL LATEX (SEMIGLOSS).
- B. GYPSUM BOARD SUBSTRATES (PAINT FINISH):
  1. HIGH-PERFORMANCE ARCHITECTURAL LATEX SYSTEM:
     - a. PRIME COAT: INTERIOR LATEX PRIMER/SEALER.
     - b. INTERMEDIATE COAT: HIGH-PERFORMANCE ARCHITECTURAL LATEX MATCHING TOPCOAT.
     - c. TOPCOAT: HIGH-PERFORMANCE ARCHITECTURAL LATEX (LOW SHEEN).
- C. CONCRETE SUBSTRATES, TRAFFIC SURFACES
  1. CLEAR SEALER SYSTEM:
     - a. PRIME COAT: CONCRETE FLOOR SEALER (WATERBASED)
     - b. TOPCOAT: CONCRETE FLOOR SEALER (WATERBASED)
- D. GALVANIZED METAL SUBSTRATES
  1. HIGH PERFORMANCE ARCHITECTURAL LATEX SYSTEM:
     - a. PRIME COAT: WATERBORNE GALVANIZED PRIMER.
     - b. INTERMEDIATE COAT: HIGH PERFORMANCE ARCHITECTURAL LATEX MATCHING TOPCOAT.
     - c. TOPCOAT: HIGH PERFORMANCE ARCHITECTURAL LATEX SEMI-GLOSS.
- E. EXPOSED PIPES: PAINT EXPOSED PIPING FOR IDENTIFICATION IN ADDITION TO LABELS REQUIRED IN OTHER SECTIONS AS FOLLOWS:
  1. HEATING HOT WATER PIPING: PINK; SHERWIN WILILAMS NO. 6303, ROSE COLORED.
  2. DOMESTIC COLD WATER PIPING: DARK BLUE; SHERWIN WILLIAMS NO. 6244, NAVAL.
  3. DOMESTIC HOT WATER PIPING: ROSE RED; SHERWIN WILILAMS NO. 6863, LUSTY RED.

DIVISION 10 - SPECIALTIES

10 2800 - TOILET AND BATH ACCESSORIES

PART 1 - GENERAL

1.1. SUMMARY
- A. THIS SECTION INCLUDES THE FOLLOWING:
  1. TOILET AND BATH ACCESSORIES.
- B. OWNER-FURNISHED/OWNER-INSTALLED MATERIAL: A1 TOILET TISSUE DISPENSER, B1 AND B2 PAPER TOWEL DISPENSER, AND J1 LIQUID-SOAP DISPENSER.

1.2. SUBMITTALS
- A. PRODUCT DATA: FOR EACH TYPE OF PRODUCT INDICATED.
- B. PROJECT SCHEDULE: INDICATING TYPES, QUANTITIES, SIZES, AND INSTALLATION LOCATIONS BY ROOM OF EACH ACCESSORY REQUIRED.
  1. IDENTIFY LOCATIONS USING ROOM DESIGNATIONS INDICATED ON DRAWINGS.

PART 2 - PRODUCTS

2.1. MATERIALS
- A. STEEL SHEET: ASTM A 1008/A 1008M, DESIGNATION CS (COLD ROLLED, COMMERCIAL STEEL), 0.0359-INCH MINIMUM NOMINAL THICKNESS.
- B. GALVANIZED STEEL SHEET: ASTM A 653/A 653M, WITH G60 HOT-DIP ZINC COATING.
- C. GALVANIZED STEEL MOUNTING DEVICES: ASTM A 153/A 153M, HOT-DIP GALVANIZED AFTER FABRICATION.
- D. FASTENERS: SCREWS, BOLTS, AND OTHER DEVICES OF SAME MATERIAL AS ACCESSORY UNIT AND TAMPER-AND-THEFT RESISTANT WHERE EXPOSED, AND OF GALVANIZED STEEL WHERE CONCEALED.
- E. MIRRORS: ASTM C 1503, MIRROR GLAZING QUALITY, CLEAR-GLASS MIRRORS, NOMINAL 6.0 MM THICK.

2.2. TOILET AND BATH ACCESSORIES
- A. BASIS-OF-DESIGN PRODUCT: THE DESIGN FOR ACCESSORIES IS BASED ON PRODUCTS INDICATED. SUBJECT TO COMPLIANCE WITH REQUIREMENTS, PROVIDE THE NAMED PRODUCT OR A COMPARABLE PRODUCT BY THE FOLLOWING:
  1. BOBRICK WASHROOM EQUIPMENT, INC.
- B. TOILET TISSUE (ROLL) DISPENSER:
  1. OWNER FURNISHED UNIT.
- C. PAPER TOWEL (FOLDED) DISPENSER:
  1. OWNER FURNISHED UNIT.
  2. MOUNTING: SURFACE MOUNTED.
  3. LARGE CAPACITY Z-FOLD TYPE.
- D. MIRROR UNIT WITHOUT SHELF:
  1. BASIS-OF-DESIGN PRODUCT: BOBRICK WASHROOM EQUIPMENT, INC.; B-290.
  2. FRAME: 2" WIDE WOOD FRAME STAINED TO MATCH SHT V-1
     - a. CORNERS: MITERED
  3. HANGERS: PRODUCT RIGID, TAMPER- AND THEFT-RESISTANT INSTALLATION, USING METHOD INDICATED BELOW.
     - a. WALL BRACKET OF GALVANIZED STEEL, EQUIPPED WITH CONCEALED LOCKING DEVICES REQUIRING A SPECIAL TOOL TO REMOVE.
  4. SIZE: 24" X 36"
- F. LIQUID-SOAP DISPENSER:
  1. OWNER FURNISHED UNIT.
  2. MOUNTING: SURFACE MOUNTED.
- G. ROBE HOOK:
  1. KOHLER FORTE K-11375-BN SCULPTED ROBE HOOK.
  2. DESCRIPTION: DOUBLE-PRONG UNIT.
  3. MATERIAL AND FINISH: VIBRANT BRUSHED NICKEL.
  4. MOUNTING: CONCEALED WALL PLATE.
  5. INSTALL ON THE TOILET SIDE OF EACH TOILET ROOM DOOR.
- H. GRAB BAR: REUSE EXISTING WHERE POSSIBLE.
  1. BASIS-OF-DESIGN PRODUCT: BOBRICK WASHROOM EQUIPMENT, INC; B-6806X36.
  2. MOUNTING: FLANGES WITH CONCEALED FASTENERS. HORIZONTAL MOUNT.
     - a. FOR TOILET PARTITION MOUNTING PROVIDE BOBRICK ANCHOR NO. 2583, FOR EACH FLANGE.
  3. MATERIAL: STAINLESS STEEL, 0.05 INCH THICK.
     - a. FINISH: SMOOTH, NO. 4, SATIN FINISH.
  4. OUTSIDE DIAMETER: 1-1/2 INCHES.
  5. CONFIGURATION AND LENGTH: STRAIGHT, 36 INCHES LONG.
  6. OUTSIDE DIAMETER: 1-1/2 INCHES.
- I. GRAB BAR: REUSE EXISTING WHERE POSSIBLE.
  1. BASIS-OF-DESIGN PRODUCT: BOBRICK WASHROOM EQUIPMENT, INC; B-6806X48.
  2. MOUNTING: FLANGES WITH CONCEALED FASTENERS. HORIZONTAL MOUNT.
     - a. FOR TOILET PARTITION MOUNTING PROVIDE BOBRICK ANCHOR NO. 2583, FOR EACH FLANGE.
  3. MATERIAL: STAINLESS STEEL, 0.05 INCH THICK.
     - a. FINISH: SMOOTH, NO. 4, SATIN FINISH.
  4. OUTSIDE DIAMETER: 1-1/2 INCHES.
  5. CONFIGURATION AND LENGTH: STRAIGHT, 48 INCHES LONG.
  6. OUTSIDE DIAMETER: 1-1/2 INCHES.

2.5. FABRICATION
- A. GENERAL: FABRICATE UNITS WITH TIGHT SEAMS AND JOINTS, AND EXPOSED EDGES ROLLED. HANG DOORS AND ACCESS PANELS WITH FULL-LENGTH, CONTINUOUS HINGES. EQUIP UNITS FOR CONCEALED ANCHORAGE AND WITH CORROSION-RESISTANT BACKING PLATES.
- B. FRAMED GLASS-MIRROR UNITS: FABRICATE FRAMES FOR GLASS-MIRROR UNITS TO ACCOMMODATE GLASS EDGE PROTECTION MATERIAL. PROVIDE MIRROR BACKING AND SUPPORT SYSTEM THAT PERMITS RIGID, TAMPER-RESISTANT GLASS INSTALLATION AND PREVENTS MOISTURE ACCUMULATION.
  1. PROVIDE GALVANIZED STEEL BACKING SHEET, NOT LESS THAN 0.034 INCH AND FULL MIRROR SIZE, WITH NON-ABSORBEND FILLER MATERIAL. CORRUGATED CARDBOARD IS NOT AN ACCEPTABLE FILLER MATERIAL.
- C. KEYS: PROVIDE UNIVERSAL KEYS FOR INTERNAL ACCESS TO ACCESSORIES FOR SERVICING AND RESUPPLYING. PROVIDE MINIMUM OF SIZE KEYS TO OWNER'S REPRESENTATIVE.

PART 3 - EXECUTION

3.1. INSTALLATION
- A. INSTALL ACCESSORIES ACCORDING TO MANUFACTURERS' WRITTEN INSTRUCTIONS, USING FASTENERS APPROPRIATE TO SUBSTRATE INDICATED AND RECOMMENDED BY UNIT MANUFACTURER. INSTALL UNITS LEVEL, PLUMB, AND FIRMLY ANCHORED IN LOCATIONS AND AT HEIGHTS INDICATED.
- B. CONFIRM ATTACHMENT (MECHANICAL OR ADHESIVE) AND REINFORCEMENT REQUIREMENTS OF ALL ACCESSORIES, INCLUDING OWNER-FURNISHED/CONTRACTOR-INSTALLED (OF/CI) AND OWNER FURNISHED/OWNER INSTALLED (OF/OI).
- C. GRAB BARS: INSTALL TO WITHSTAND A DOWNWARD LOAD OF AT LEAST 500 LBF, WHEN TESTED ACCORDING TO METHOD IN ASTM F 446.

3.2. ACCESSORIES SCHEDULE AND NOTES
- A. NOTES FOR ACCESSORIES:
  1. COMPLY WITH AMERICANS WITH DISABILITIES ACT, AND OTHER APPLICABLE ACCESSIBILITY CODES FOR ACCESSIBILITY REQUIREMENTS.
  2. SEE INTERIOR ELEVATIONS IN THE DRAWINGS FOR ADDITIONAL MOUNTING HEIGHTS AND LOCATIONS FOR TOILET AND RELATED ACCESSORIES.
  3. LOCATE MOP AND BROOM HOLDERS IN JANITOR CLOSETS SO THAT WET MOP WILL DRIP INTO THE JANITOR SINK.
  4. COORDINATE WITH ARCHITECT TO FIELD LOCATE TOILET ACCESSORIES NOT LOCATED ON THE DRAWINGS.

DIVISION 12 - FURNISHINGS

12 2413 - ROLLER SHADES

1.1. SUMMARY
- A. ELECTRIC AND MANUAL ROLLER SHADES AND HARDWARE (BY OWNER)

1.2. QUALITY ASSURANCE:
- A. INSTALLER SHALL BE FABRICATOR OF PRODUCT

1.3. PRODUCT
- A. THERMOVEIL 1000 SERIES SUNCREENS, MECHOSHADE SYSTEM, INC. (EXTERIOR WINDOWS)
  1. COLOR: PORCELAIN
  2. PATTEN: 3% OPENNESS
- B. ROLLERS: EPOXY PRIMED STEEL
- C. DIRECTION OF ROLL: REVERSE
- D. MOUNTING BRACKETS: GALVANIZED OR ZINC-PLATED
- E. FASCIA: L-SHAPED, EXTRUDED ALUMINUM

1.4. INSTALLATION
- A. INSTALL ROLLER LEVEL, PLUMB, AND TRUE ACCORDING TO MANUFACTURER'S WRITTEN INSTRUCTIONS
- B. TYPE AND COLOR TO MATCH EXISTING VIP PATIENT ROOMS.

G S & P®
Design Services For The Built Environment
Atlanta
Birmingham
Charlotte
Cincinnati
Columbus
Dallas
Fort Lauderdale
Knoxville
Jackson
Jacksonville
Louisville
Memphis
Nashville
Richmond
Tampa

GRESHAM SMITH AND PARTNERS
5220 Belfort Road
Suite 100
Jacksonville, FL 32256
904.332.6699
FIRM'S FLORIDA CERT. NO. AAP000034/EB0003806 IB26000797

FLAGLER HOSPITAL
Excellence As A Way Of Life

IS PHASE II

CONSTRUCTION DOCUMENTS

SEAL:

HILLARY MCDONALD
ID 5463

REVISION

No.	Date	Revision

ARCHITECTURAL SPECIFICATIONS

A9.2

PROJECT: 28477.01
DATE: AUGUST 31, 2012

Drawn By: Checked By: Approved By:
LEV $LNM1$ $LNM2$ $LNM3$ $LNM4$ $LNM5$
DGN $SYTIME$ $DISPLAY$ $FENCE$ $PROJECT$ $WORK$ Pages: $PAGE$ $REF1$ $REF2$ $REF3$ $REF4$ $REF5$
$INSTR$ $PLOTTER$ $DATE$ $TIME$ $SCALE$ FBL PRF TBL
$USER$

GS&P
GRESHAM
SMITH AND
PARTNERS

FLAGLER HOSPITAL
IS PHASE II

CONSTRUCTION DOCUMENTS

St. Augustine, Florida GS&P No. 28477.01

GRAPHIC SYMBOLS

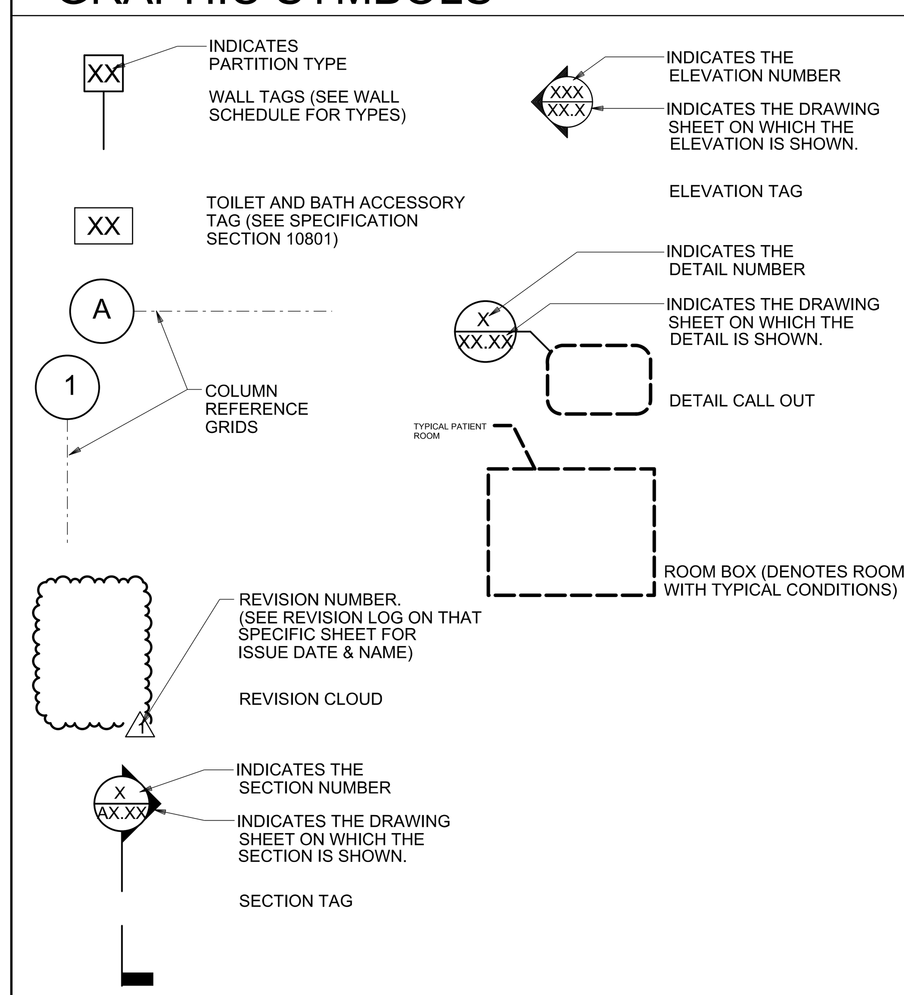

*SEE SHEET LEGENDS FOR ADDITIONAL GRAPHIC SYMBOLS AND DESCRIPTIONS

MATERIALS IN PLAN & SECTION

FINISH WOOD	GYPSUM BOARD
ROUGH WOOD	ACOUSTICAL TILE
BATT INSULATION	RESILIENT FLOORING
PLYWOOD	

INDEX OF DRAWINGS

ARCHITECTURAL

COVER SHEET
AL.01a FIRST FLOOR PART A LIFE SAFETY PLAN
AL.01b FIRST FLOOR PART B LIFE SAFETY PLAN
AL.04 FOURTH FLOOR LIFE SAFETY PLAN
A2.01 DEMOLITION AND NEW CONSTRUCTION FLOOR PLANS
A8.1 DOOR SCHEDULE AND MISC DETAILS
A9.1 ARCHITECTURAL SPECIFICATIONS
A9.2 ARCHITECTURAL SPECIFICATIONS

MECHANICAL

M0.01 SYMBOLS LEGEND ABBREVIATIONS AND INDEX - MECHANICAL
M1.01 PARTIAL FOURTH FLOOR DEMOLITION PLAN - MECHANICAL
M2.01 PARTIAL FOURTH FLOOR NEW WORK PLAN - MECHANICAL
M2.02 PARTIAL FIFTH FLOOR AND ROOF NEW WORK PLAN - MECHANICAL
M3.01 DETAILS AND CONTROLS - MECHANICAL

PLUMBING

P0.01 LEGEND AND NOTES - PLUMBING
P1.01 PARTIAL 4TH FLOOR DEMO PLAN - PLUMBING
P2.01 PARTIAL 4TH FLOOR PLAN - PLUMBING

FIRE PROTECTION

F0.01 LEGEND AND NOTES - FIRE PROTECTION
F1.01 PARTIAL 4TH FLOOR DEMO PLAN - FIRE PROTECTION
F2.01 PARTIAL 4TH FLOOR PLAN - FIRE PROTECTION

ELECTRICAL

E0.01 ELECTRICAL LEGEND, NOTES AND INDEX
E1.01 DEMOLITION PLAN - LIGHTING
E1.02 DEMOLITION PLAN - POWER
E2.01 OVERALL PLAN - SYSTEMS
E2.02 FLOOR PLAN - LIGHTING
E2.03 FLOOR PLAN - POWER
E2.04 ROOF PLAN - ELECTRICAL
E3.01 ELECTRICAL DETAILS
E4.01 ELECTRICAL SPECIFICAITONS

DESIGN TEAM

Architecture: Gresham, Smith and Partners
5220 Belfort Road
Jacksonville, Florida 32256
(904) 332-6699

I. D. O. R. Hillary McDonald
P. M. Joe Bucci
I. D. Penny Houchens

MEP: TLC: Engineering for Architecture
1650 Prudential Drive, Suite 200
Jacksonville, Florida 32207
(904) 306-9111

E.O.R. Gerald Versluys, P.E.
E.O.R. Ryan Lime, P.E.
P.M. DJ Parker

VICINITY MAP

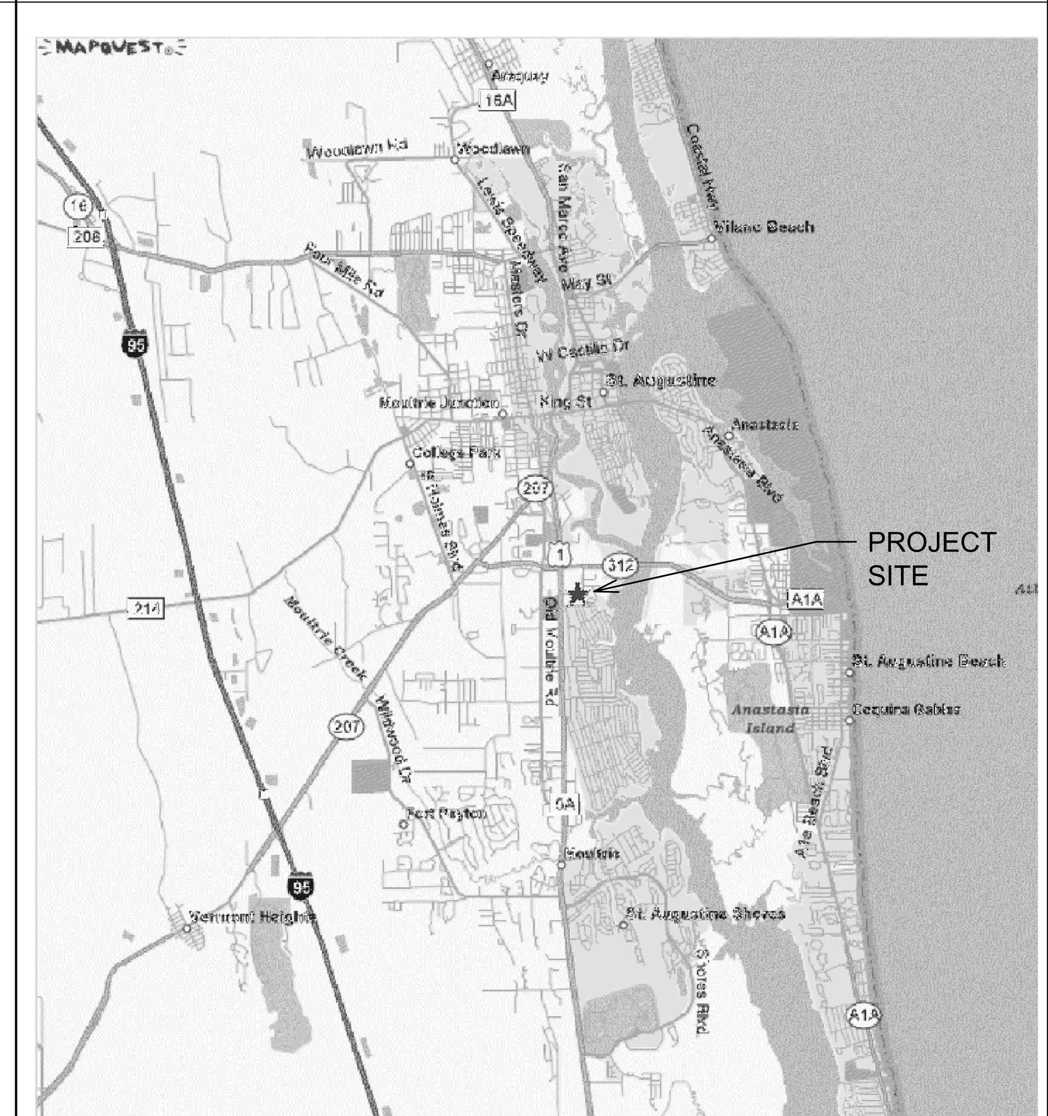

Not To Scale

Flagler Hospital
IS PHASE II
GS&P Project No. 28477.01

CONSTRUCTION DOCUMENTS

REVISION		
No. -	Date -	Revision

Drawn By:

Checked By:

Approved By:

First Floor			
Compartment	Area (SF)	Occupancy Factor	Occupants
A-1	12,533	120	104
A-2	11,486	120	96
A-3	9,015	240	38
A-4	14,925	240	60
A-5	19,030	100	190
A-6	11,006	240	46
A-7	12,975	240	54
B-1	19,695	240	82
B-2	16,432	240	68
B-2 Assembly	4,280	15	285
C-1	13,003	240	54
C-2	2,603	240	11
Total Occupants			1,088

Exit Width Provided			
Description	Inches Provided	Egress Factor	Occupants Provided For
Stairs	-	0.4	
Horizontal Exits	294	0.2	1,320
Exterior Doors	828	0.2	4,140
Total Occupants Provided for			5,460

LEGEND

20	20 MIN. FIRE DOOR RATING	1-HR. FIRE WALL
30	30 MIN. FIRE DOOR RATING	1-HR. FIRE WALL
45	45 MIN. FIRE DOOR RATING	2-HR. FIRE WALL
60	60 MIN. FIRE DOOR RATING	1-HR. FIRE/SMOKE WALL
90	90 MIN. FIRE DOOR RATING	2-HR. FIRE/SMOKE WALL
180	180 MIN. FIRE DOOR RATING	4-HR. FIRE SEPARATION
N	NO LABEL	
?	UNREADABLE LABEL	
EXIT	EXIT SIGN	
PS	PULL STATION	

SMOKE COMPARTMENT DESIGNATION — 1A

CLEAR WIDTH OF EGRESS DOOR (IN INCHES) — 44

TRAVEL DISTANCE TO EXIT DOOR — 135'–6"

TRAVEL DISTANCE TO DOOR INTO ADJACENT SMOKE COMPARTMENT — 143'–4"

BUILDING FIRE PROTECTION

AREA SPRINKLERED: THE HOSPITAL IS FULLY SPRINKLERED

FIRE PROTECTION UL DESIGN NUMBERS:

EXISTING BUILDING:

	COLUMNS	UL X772 (4 HOUR)
	ROOF/CEILING	UL D916 (3 OR 4 HOUR)
	FLOOR/CEILING	UL D916 (3 OR 4 HOUR)
GENERAL MATERIALS:		
	EXTERIOR WALLS	STUCCO ON METAL STUDS/CMU
	INTERIOR WALLS	GYP. BD. ON METAL STUDS
	STRUCTURE	STEEL COLUMNS/BEAMS AND CONCRETE BEARING WALLS AND ROOF
	FLOOR	CONCRETE FLOOR DECK
	ROOF MEMBRANE	P.V.C.

FIRST FLOOR

0' 5' 10' 20'

N

GS&P

Design Services For The Built Environment

Atlanta
Birmingham
Charlotte
Cincinnati
Columbus
Dallas
Fort Lauderdale
Knoxville
Jackson
Jacksonville
Louisville
Memphis
Nashville
Richmond
Tampa

GRESHAM SMITH AND PARTNERS

5220 Belfort Road
Suite 100
Jacksonville, FL 32256
904.332.6699

FIRM'S FLORIDA CERT. NO. AAP000034/EB0003806
IB26000797

FLAGLER HOSPITAL
Excellence As A Way Of Life

IS PHASE II

CONSTRUCTION DOCUMENTS

SEAL:

HILLARY MCDONALD
ID 5463

REVISION

No.	Date	Revision

FIRST FLOOR PART A
LIFE SAFETY PLAN

AL.01a

PROJECT:28477.01
DATE:AUGUST 31, 2012

$LEVS
$LNKXS
$LNKXS
$LNKXS
$LNKXS
$LNKXS

$BOMS
$SYTIMES
$DISPLAYS
$SHEETS
$PROJECTS
$VIEWS
Pages:
$PAGES
$REFPS
$REFPS
$REFPS
$REFPS
$REFPS

$NOTES
$ADDITIONS
$DATES
$TIMES
$STAMPS
$SCHEDULES
$FILS
$SHAPES
$TBLS

$USERS

Drawn By:
Checked By:
Approved By:

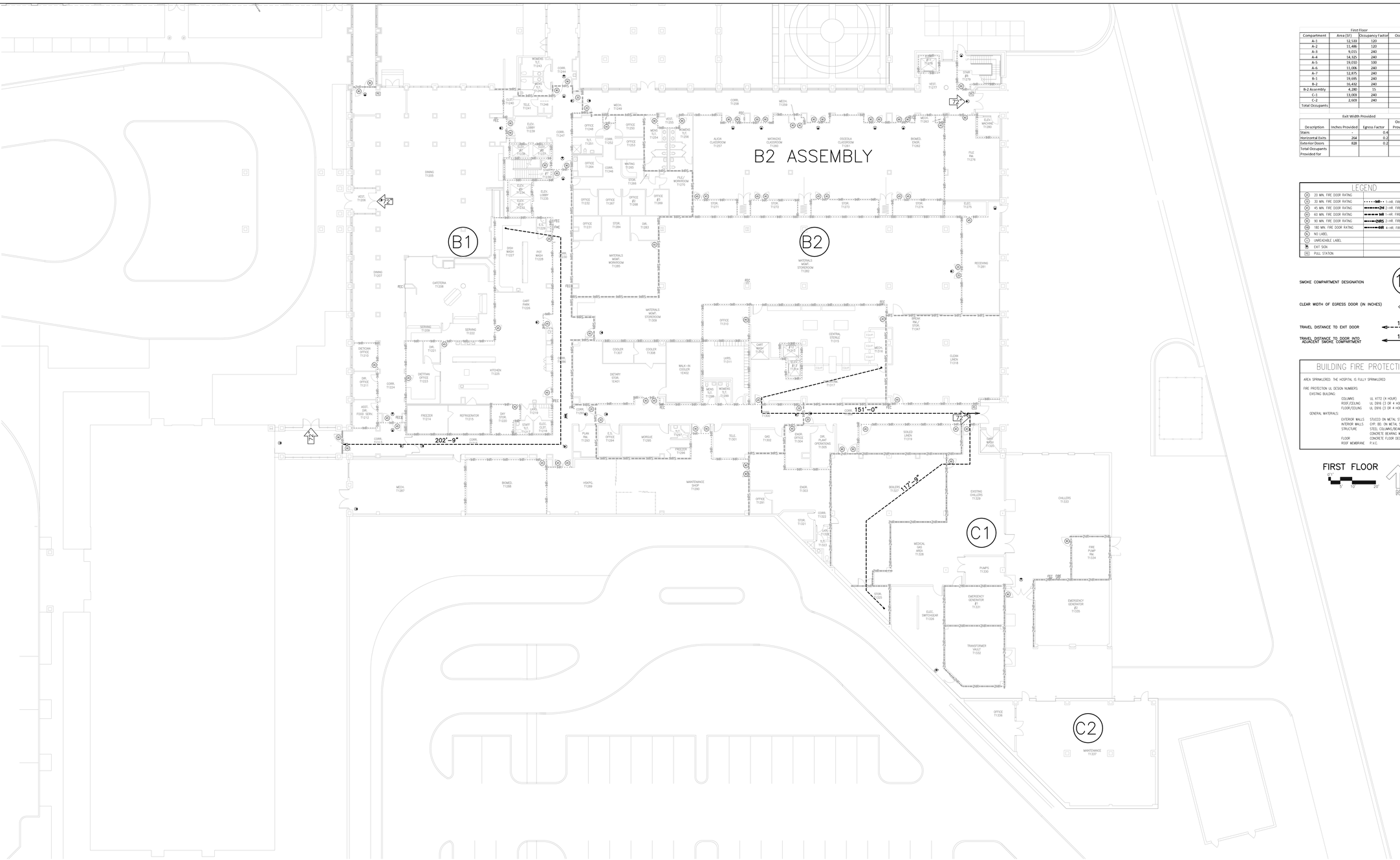

First Floor

Compartment	Area (SF)	Occupancy Factor	Occupants
A-1	12,533	120	104
A-2	11,486	120	96
A-3	9,015	240	38
A-4	14,325	240	60
A-5	19,010	100	190
A-6	11,006	240	46
A-7	12,875	240	54
B-1	19,695	240	82
B-2	16,432	240	68
B-2 Assembly	4,280	15	285
C-1	13,003	240	54
C-2	2,603	240	11
Total Occupants			1,088

Exit Width Provided

Description	Inches Provided	Egress Factor	Occupants Provided For
Stairs	-	0.4	-
Horizontal Exits	264	0.2	1,320
Exterior Doors	828	0.2	4,140
Total Occupants Provided for			5,460

LEGEND

20 MIN. FIRE DOOR RATING	
30 MIN. FIRE DOOR RATING	1-HR. FIRE WALL
45 MIN. FIRE DOOR RATING	2-HR. FIRE WALL
60 MIN. FIRE DOOR RATING	1-HR. FIRE/SMOKE WALL
90 MIN. FIRE DOOR RATING	2-HR. FIRE/SMOKE WALL
180 MIN. FIRE DOOR RATING	4-HR. FIRE SEPARATION
NO LABEL	
UNREADABLE LABEL	
EXIT SIGN	
PULL STATION	

SMOKE COMPARTMENT DESIGNATION 1A

CLEAR WIDTH OF EGRESS DOOR (IN INCHES) 44"

TRAVEL DISTANCE TO EXIT DOOR 135'-6"

TRAVEL DISTANCE TO DOOR INTO ADJACENT SMOKE COMPARTMENT 143'-4"

BUILDING FIRE PROTECTION

AREA SPRINKLERED: THE HOSPITAL IS FULLY SPRINKLERED

FIRE PROTECTION UL DESIGN NUMBERS:

EXISTING BUILDING:

COLUMNS	UL X772 (4 HOUR)
ROOF/CEILING	UL D916 (3 OR 4 HOUR)
FLOOR/CEILING	UL D916 (3 OR 4 HOUR)

GENERAL MATERIALS:

EXTERIOR WALLS	STUCCO ON METAL STUDS/CMU
INTERIOR WALLS	GYP. BD. ON METAL STUDS
STRUCTURE	STEEL COLUMNS/BEAMS AND CONCRETE BEARING WALLS AND ROOF
FLOOR	CONCRETE FLOOR DECK
ROOF MEMBRANE	P.V.C.

FIRST FLOOR

0'1" 5' 10' 20'

N

G S & P

Design Services For The Built Environment

Atlanta
Birmingham
Charlotte
Cincinnati
Columbus
Dallas
Fort Lauderdale
Knoxville
Jackson
Jacksonville
Louisville
Memphis
Nashville
Richmond
Tampa

GRESHAM SMITH AND PARTNERS
5220 Belfort Road
Suite 100
Jacksonville, FL 32256
904.332.6699
FIRM'S FLORIDA CERT. NO. AAP000034/EB0003806 IB26000797

FLAGLER HOSPITAL
Excellence As A Way Of Life

IS PHASE II

CONSTRUCTION DOCUMENTS

SEAL:

HILLARY MCDONALD
ID 5463

REVISION

No. -	Date -	Revision

FIRST FLOOR
PART B
LIFE SAFETY PLAN

AL.01b

PROJECT: 28477.01
DATE: AUGUST 31, 2012

LEV
$LNM1$
$LNM2$
$LNM3$
$LNM4$
$LNM5$

DGN
$SYTIME$
$DISPLAY$
$FENCE$
$PROJECT$
$WORK$
$PAGE$
$REF1$
$REF2$
$REF3$
$REF4$
$REF5$

Pages:

$INSTR$
$PLOTTER$
$DATE$
$TIME$
$SCALE$
FBL
PRF
TBL

$USER$

Drawn By:
Checked By:
Approved By:

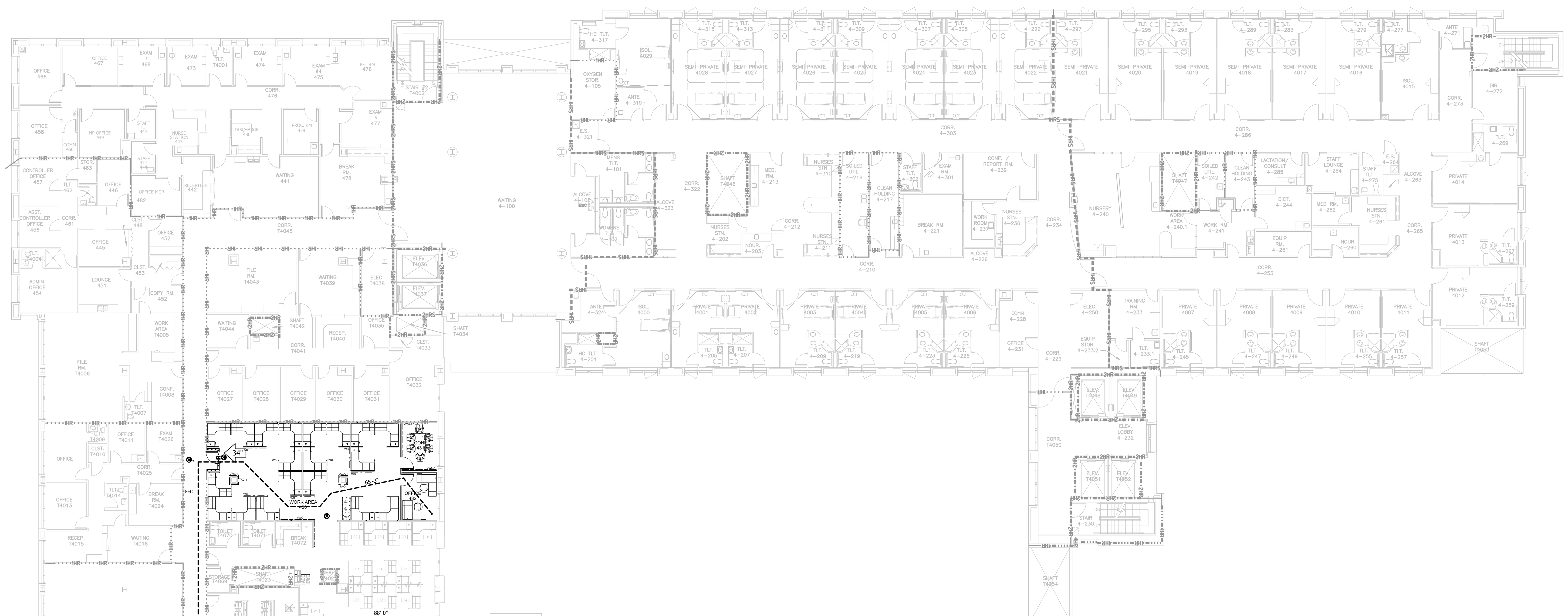

1 FOURTH FLOOR - LIFE SAFETY PLAN

0 5' 10' 15'

GENERAL NOTES

1. PROJECT IS ARCHITECTURALLY BARRIER FREE, 100% ACCESSIBLE PER THE APPLICABLE BUILDING CODE.
2. MODIFY EXISTING SPRINKLER SYSTEM AS REQUIRED BY NEW PARTITIONS PER NFPA 13.
3. PLACE SPRINKLER HEAD AT CENTER OF CEILING TILE U.N.O.
4. LIFE SAFETY INFORMATION PROVIDED BY OWNER.

APPLICABLE CODES

1. 2010 FLORIDA BUILDING CODE.
2. 2008 NATIONAL ELECTRIC CODE.
3. 2010 FLORIDA PLUMBING CODE.
4. 2007 FLORIDA MECHANICAL CODE.
5. FLORIDA EDITION OF THE NATIONAL FIRE PROTECTION ASSOCIATION (NFPA) 101 LIFE SAFETY CODE, 2006 EDITION OF THE FLORIDA FIRE PREVENTION CODE.
6. NFPA 220, STANDARD ON TYPES OF BUILDING CONSTRUCTION.
7. NFPA 221, STANDARD FOR FIRE WALLS AND FIRE BARRIER WALLS.
8. 2010 EDITION FLORIDA BUILDING CODE CHAPTER 11 ACCESSIBILIITY CODE.

BUILDING CLASSIFICATION

OCCUPANCY TYPE: BUSINESS
FBC OCCUPANCY GROUP B: PROFESSIONAL SERVICE

CONSTRUCTION TYPE:
FBC CONSTRUCTION TYPE II B. SECTION 602, 2007 EDITION AND TABLE 601
NFPA CONSTRUCTION TYPE II (000) TABLE A-8.2.1.2

BUILDING FIRE PROTECTION

AREA SPRINKLERED: FULLY SPRINKLERED

FIRE PROTECTION UL DESIGN NUMBERS:
COLUMNS .... O HOUR TYP.
FLOOR/BEAM .... 1 HOUR TYP. BETWEEN FLOOR LEVELS FOR TENANT SEPARATION U.L. D925
ROOF/CEILING .... 0 HOUR TYP.

GENERAL MATERIALS:
EXTERIOR WALLS .... STUCCO OVER METAL STUDS
INTERIOR WALLS .... GYPSUM BOARD ON METAL SYUDS
STRUCTURE .... WIDE PLANGE COLUMNS/BEAMS
FLOOR .... COMPOSITE CONCRETE FLOOR DECK
ROOF MEMBRANE .... CORRUGATED METAL DECKING AND BUILD-UP ROOFING OVER SHEATHING AND METAL TRUSS FRAMING

TENANT INFORMATION

OCCUPANCY GROUP .... BUSINESS OCCUPANCY
CONSTRUCTION TYPE .... TYPE II B - SPRINKLERED
TOTAL BUILD-OUT SQUARE FOOTAGE .... 1478 SQ.F.T

ALLOWABLE S.F. / OCCUPANT .... 100 SQ.FT. (GROSS)
NUMBER OF OCCUPANTS .... 14 PEOPLE

EGRESS FACTOR .... .2" / PERSON
EGRESS REQUIRED .... 2.8"
EGRESS PROVIDED .... 34"

CLASSROOM (500 SQ. FT) - BUSINESS OCCUPANCY
CHAPTER 3 303.1 ASSEMBLY "EXCEPTIONS" 3. - A ROOM OR SPACE USED FOR ASSEMBY PURPOSES THAT IS LESS THAN 750 SQUARE FEET IN AREA IS ACCESSORY TO ANOTHER OCCUPANCY SHALL BE CLASSIFIED AS A GROUP B OCCUPANCY.

LEGEND

EXISTING TO REMAIN	
NEW CONSTRUCTION	
EXISTING ONE-HOUR RATED FIRE BARRIER	1HR
EXISTING ONE-HOUR RATED SMOKE BARRIER	1HRS
EXISTING TWO-HOUR RATED FIRE BARRIER	2HR
EXISTING TWO-HOUR RATED (SHAFTWALL) BARRIER	SFT
EXISTING TWO-HOUR RATED SMOKE BARRIER	2HRS
ONE-HOUR RATED FIRE BARRIER	1HR
ONE-HOUR RATED SMOKE BARRIER	1HRS
TWO-HOUR RATED FIRE BARRIER	2HR
TWO-HOUR RATED (SHAFTWALL) BARRIER	SFT
TWO-HOUR RATED SMOKE BARRIER	2HRS
FIRE DEPARTMENT VALVE	FDV
FIRE DEPARTMENT VALVE CABINET	FDVC
FIRE DEPARTMENT VALVE CABINET WITH FIRE EXTINGUISHER	FDVC W/FE
FIRE EXTINGUISHER	FE
FIRE EXTINGUISHER CABINET	FEC
FIRE HOSE CABINET	FHC
FIRE HOSE CABINET WITH FIRE EXTINGUISHER	FHC W/FE
STANDPIPE	SP
FIRE ALARM MANUAL PULL STATION	PS
FIRE ALARM DEVICE	F
FIRE STROBE	F
DRINKING FOUNTAIN	ACC EWC
CLEAR WIDTH OF EGRESS DOOR (IN INCHES)	44"
TRAVEL DIRECTION AND DISTANCE TO EXIT	135'-6"
EXIT LIGHTS	

G S & P®

Design Services For The Built Environment

Atlanta
Birmingham
Charlotte
Cincinnati
Columbus
Dallas
Fort Lauderdale
Knoxville
Jackson
Jacksonville
Louisville
Memphis
Nashville
Richmond
Tampa

GRESHAM SMITH AND PARTNERS
5220 Belfort Road
Suite 100
Jacksonville, FL 32256
904.332.6699
FIRM'S FLORIDA CERT. NO. AAP000034/EB0003806 IB26000797

FLAGLER HOSPITAL
Excellence As A Way Of Life

IS PHASE II

CONSTRUCTION DOCUMENTS

SEAL:

HILLARY MCDONALD
ID 5463

REVISION		
No. -	Date -	Revision

FOURTH FLOOR
LIFE SAFETY PLAN

AL.04

PROJECT: 28477.01
DATE: AUGUST 31, 2012

LEV
$LNM1$ $LNM2$ $LNM3$ $LNM4$ $LNM5$
Pages: DGN $SYTIME$ $DISPLAY$ $FENCE$ $PROJECT$ $WORK$ $PAGE$ $REF1$ $REF2$ $REF3$ $REF4$ $REF5$
$INSTR$ $PLOTTER$ $DATE$ $TIME$ $SCALE$ FBL PRF TBL
$USER$

TLC ENGINEERING FOR ARCHITECTURE
1650 Prudential Drive
Suite 200
Jacksonville, Florida 32207
Phone: 904-306-9111
Fax: 904-306-9117
www.tlc-engineers.com
© Copyright 2011 TLC Engineering for Architecture, Inc.
COA 15 TLC NO:812082
DRAWN BY: JDH CHECKED BY: GJV
APPROVED BY: GJV

ELECTRICAL SYMBOL LEGEND

BASIC MATERIALS

SYMBOL	DESCRIPTION
S_S	SINGLE POLE SWITCH (SUBSCRIPT INDICATES ITEM CONTROLLED)
S_3	THREE-WAY SWITCH
S_4	FOUR-WAY SWITCH
S_P	SINGLE POLE SWITCH WITH PILOT LIGHT
S_{WP}	SINGLE POLE SWITCH WITH WEATHERPROOF COVER
S_{WPL}	SINGLE POLE SWITCH WITH WEATHERPROOF LOCKING COVER
S_K	SINGLE POLE KEY SWITCH
S_{3K}	THREE-WAY KEY SWITCH
S_{4K}	FOUR-WAY KEY SWITCH
S_L	SINGLE POLE SWITCH WITH SECURITY LOCKING KEY
S_M	MANUAL MOTOR STARTER WITH OVERLOAD HEATERS
S_{MP}	MANUAL MOTOR STARTER WITH OVERLOAD HEATERS AND PILOT LIGHT
S_D	DIMMER SWITCH (1500 WATTS UNLESS OTHERWISE INDICATED)
	CEILING MOUNTED OCCUPANCY SENSOR
	WALL MOUNTED OCCUPANCY SENSOR
	DUPLEX RECEPTACLE
T	TWIST LOCK RECEPTACLE
SP	SURGE PROTECTION TYPE (TVSS) DUPLEX RECEPTACLE
	PEDESTAL MOUNTED RECEPTACLE
	FLOOR OUTLET BOX AND DUPLEX RECEPTACLE WITH APPROPRIATE FLANGE.
	FLOOR OUTLET BOX WITH DUPLEX RECEPTACLE AND ONE COMBINATION W/ VOICE/DATA OUTLET
	FLOOR OUTLET BOX WITH TWO DUPLEX RECEPTACLES AND ONE COMBINATION W/ VOICE/DATA OUTLET
P	POKE THRU
	POWER POLE
	DUPLEX RECEPTACLE WITH EACH HALF ON SEPARATE CIRCUIT (BREAKER SHALL BE TWO POLE WITH COMMON TRIP)
	DUPLEX RECEPTACLE MOUNTED ABOVE COUNTER
	DUPLEX SAFETY RECEPTACLE MOUNT COVERPLATES WITH SPANNER HEAD SCREWS
	DUPLEX RECEPTACLE WITH TOP HALF SWITCHED
EWC	SIMPLEX RECEPTACLE (EWC DENOTES ELECTRIC WATER COOLER. COORDINATE WITH EWC INSTALLER FOR MOUNTING HEIGHT)
WP	GFI RECEPTACLE. WP DENOTES WEATHERPROOF COVER.
	GFI RECEPTACLE MOUNTED ABOVE COUNTER
	TWO DUPLEX RECEPTACLES WITH COMMON COVER
	TWO DUPLEX RECEPTACLES WITH COMMON COVER MOUNTED ABOVE COUNTER
IG	ISOLATED GROUND DUPLEX RECEPTACLE, (ORANGE DEVICE)
	DUPLEX RECEPTACLE NOTE: TICK MARKS SHOWN ON ANY DEVICE REPRESENTS RECEPTACLE CONNECTED TO THE EMERGENCY CIRCUIT (RED DEVICE) TYPICAL FOR ANY DEVICE IN LEGEND
C	CLOCK RECEPTACLE
	SPECIAL PURPOSE RECEPTACLE, RATING AS NOTED
	LIGHTING CONTROL TIME CLOCK
	PHOTOCELL, MOUNTED ON ROOF FACING NORTH
GND	GROUND BAR
	PLUG-IN STRIP WITH RECEPTACLES, 18" O.C. UNLESS OTHERWISE INDICATED
	UNDER GROUND CONCRETE ENCASED DUCTBANK
J	JUNCTION BOX
J	JUNCTION BOX- WALL MOUNTED
J	JUNCTION BOX- FURNITURE SYSTEM FEED
	CONDUIT SEAL-OFF FITTINGS
SSL C3	SURGE SUPPRESSOR C3 = SERVICE ENTRANCE DEVICE B3 = DISTRIBUTION BOARD DEVICE A3 = PANELBOARD DEVICE
ST	SHUNT-TRIP BUTTON - FLUSH MOUNTED UNLESS OTHERWISE NOTED NEMA 3R FOR EXTERIOR LOCATIONS
	MAGNETIC MOTOR STARTER OR CONTACTOR SIZE AS NOTED
EDH-X	ELECTRIC DUCT HEATER
(S)	MOTOR CONNECTION, NUMBER DENOTES HORSEPOWER
VFD	VARIABLE FREQUENCY DRIVE
DDC	DIRECT DIGITAL CONTROL PANEL
T	TRANSFORMER
	AUTOMATIC TRANSFER SWITCH
30AR NF	NON-FUSED DISCONNECT SWITCH, SIZE AS NOTED NF DENOTES NON-FUSED
30AR 20AF	FUSED DISCONNECT AR DENOTES AMP RATING OF SWITCH AF DENOTES AMP FUSE SIZE
MCP SIZE	COMBINATION MAGNETIC MOTOR STARTER, SIZE & # OF POLES # OF POLES 3 POLE UNLESS OTHERWISE NOTED ENCLOSURE NEMA RATING. NEMA STARTER SIZE

BASIC MATERIALS CONT.

SYMBOL	DESCRIPTION
	BRANCH CIRCUIT PANELBOARD, UNDER 250 VOLTS, SURFACE MOUNTED
	BRANCH CIRCUIT PANELBOARD, UNDER 250 VOLTS, FLUSH MOUNTED
	BRANCH CIRCUIT PANELBOARD, OVER 250 VOLTS, SURFACE MOUNTED
	BRANCH CIRCUIT PANELBOARD, OVER 250 VOLTS, FLUSH MOUNTED
	BRANCH CIRCUIT CONDUIT CONCEALED ABOVE CEILING OR IN WALL. CONDUIT SHALL INCLUDE PHASE, NEUTRAL AND GROUND CONDUCTORS AS REQUIRED FOR CIRCUITS (UNLESS OTHERWISE NOTED).
	BRANCH CIRCUIT CONDUIT CONCEALED IN SLAB, UNDERGROUND OR UNDER FLOOR.
	BRANCH CIRCUIT CONDUIT EXPOSED
	GROUND OR GROUND ROD AS NOTED
EM	EMERGENCY BRANCH CONDUIT
UP	CONDUIT TURNING UP
DN	CONDUIT TURNING DOWN
	CONDUIT STUB
	CONDUIT CONTINUED
	FLEXIBLE CONDUIT
	EXISTING TO BE REMOVED
	EXISTING TO REMAIN
	EXISTING AFFECTED BY THIS PROJECT
	FUTURE
	NEW

LIGHTING

	FLUORESCENT STRIP FIXTURE
FIXTURE DESIGNATION — A CIRCUIT NUMBER — 2 o — LOWER CASE LETTER INDICATES CONTROL CIRCUIT SWITCH LEG	FLUORESCENT FIXTURE
	FLUORESCENT FIXTURE DIAGONAL SHADING DENOTES EMERGENCY LIGHT FIXTURE.
	FLUORESCENT WALL MOUNTED FIXTURE WITH WALL OUTLET BOX
	HID, FLUORESCENT, OR INCANDESCENT FIXTURE
	FLUORESCENT, OR INCANDESCENT WALL WASHER.
	ACCENT FLOOD LIGHTING - AIMING AS INDICATED
	EXIT LIGHT FIXTURE DIRECTION ARROWS AS SHOWN (SHADED QUADRANT INDICATES FACE(S) OF FIXTURE)
	WALL MOUNTED EXIT LIGHT FIXTURE
	EXTERIOR LIGHT FIXTURE WITH ARMS AS SHOWN ON DRAWINGS
	TRACK WITH TRACK LIGHT FIXTURE (TRIANGLES INDICATE QUANTITY OF LIGHT FIXTURES)
	BATTERY PACK WITH TWIN HEADS

LIGHTNING PROTECTION SYSTEM

CI	CLASS I MAIN CONDUCTOR CABLE
CII	CLASS II MAIN CONDUCTOR CABLE
	TEE SPLICE
	BONDING PLATE
	PIPE CLAMP FOR PLUMBING VENT THRU ROOF.
	AIR TERMINATION DEVICE
	GROUND TERMINAL
	BONDING CONDUCTOR
DN	DOWN CONDUCTOR
C	COUNTERPOISE CONDUCTOR
P	PARAPET MOUNTED AIR TERMINAL
F	FLAT ROOF MOUNTED OR MECHANICAL
DN	THRU-ROOF CONDUCTOR

FIRE ALARM/DETECTION SYSTEM

SYMBOL	DESCRIPTION
F	MANUAL PULL STATION
	CEILING SMOKE DETECTOR, PHOTO-ELECTRIC TYPE UNLESS OTHERWISE NOTED E = ELEVATOR WITH RECALL CONTACTS I = IONIZATION
	DUCT SMOKE DETECTOR R = RETURN S = SUPPLY
R	SUPERVISED CONTROL RELAY
R	DUCT SMOKE REMOTE ALARM INDICATING LAMP, W/ TEST SWITCH, WALL MOUNTED 72" AFF
FD	REMOTE INDICATING LAMP FIRE ALARM WITH TEST SWITCH WALL MOUNTED 72" AFF
F XXCD	COMBINATION AUDIBLE/VISUAL NOTIFICATION DEVICE CD = CANDELA RATING
S XXCD	FIRE ALARM SPEAKER - CEILING MOUNTED CD = CANDELA RATING
S XXCD	WALL MOUNTED SPEAKER WITH STROBE CD = CANDELA RATING
S XXCD	FIRE ALARM SPEAKER - WALL MOUNTED CD = CANDELA RATING
F	FIRE ALARM SPEAKER WITH STROBE - CEILING MOUNTED CD = CANDELA RATING
F	VISUAL SIGNALING UNIT, WALL MOUNTED (NO AUDIO DEVICE)
P	FIREMAN'S PHONE JACK
TS	SPRINKLER TAMPER SWITCH CONNECTION
FS	SPRINKLER WATERFLOW SWITCH CONNECTION
FPT	FIRE ALARM SYSTEM PRINTER
ZAM	ZONE ADDRESSABLE MODULE
	ELECTROMAGNETIC DOOR HOLD OPEN DEVICE
H	ELECTROMAGNETIC DOOR HOLD OPEN DEVICE CONNECTION TO CLOSURE/ HOLDER
H	ELECTROMAGNETIC DOOR HOLD OPEN DEVICE CONNECTION TO CLOSURE/ HOLDER INCLUDES DETECTOR
H	CEILING HEAT DETECTOR 135° F UNLESS OTHERWISE INDICATED.
T	BEAM DETECTOR - TRANSMITTER
R	BEAM DETECTOR - RECEIVER
FACP	FIRE ALARM CONTROL PANEL
FATC	FIRE ALARM TERMINAL CABINET
FAAP	FIRE ALARM ANNUNCIATOR PLAN - FLUSH MOUNTED
F	FIRE ALARM SYSTEM CONDUIT AND WIRING
E	FIREMAN'S ELEVATOR WARNING LIGHT

TELEPHONE/COMPUTER RACEWAY SYSTEM

SYMBOL	DESCRIPTION
	X = MOUNTING (F)LUSH, (S)URFACE, (M)ODULAR
	N = # OF VOICE JACKS N = # OF DATA JACKS N = # OF FIBER PORTS N = # OF VIDEO PORTS
X N N N N ROOM # - OUTLET # C = ABOVE THE COUNTER W = WALL MOUNTED	COMMUNICATIONS "INFORMATION OUTLET" MTD. AT RECEPTACLE HEIGHT UNLESS OTHERWISE NOTED. REFER TO SPECIFICATIONS FOR MANUFACTURER'S PART NUMBER.
P	WALL PHONE = PAY PHONE
	TELEPHONE OUTLET PEDESTAL MOUNTED
	TELEPHONE OUTLET FLOOR MOUNTED
TTB	TELEPHONE/COMPUTER TERMINAL BOARD
TTC	TELEPHONE TERMINAL CABINET
T	TELEPHONE SYSTEM RACEWAY

NOTE: SOME SYMBOLS SHOWN ON THIS LEGEND MAY NOT PERTAIN TO THIS PROJECT.

GENERAL NOTES:

1. LIGHT SWITCHES SHALL BE MOUNTED 48 INCHES ABOVE FINISHED FLOOR TO CENTER LINE OF DEVICE, UNLESS OTHERWISE NOTED.
2. RECEPTACLES SHALL BE LOCATED 18 INCHES ABOVE FINISHED FLOOR TO CENTER LINE OF DEVICE, UNLESS OTHERWISE NOTED. ABOVE COUNTER RECEPTACLES SHALL BE MOUNTED ABOVE BACK SPLASH TO CENTERLINE OF DEVICE.
3. EQUIPMENT SHALL BE OF MATERIALS SUITABLE FOR AND RATED FOR THE ENVIRONMENT IN WHICH THEY ARE TO BE INSTALLED.
4. A. WORKING CLEARANCES FOR ELECTRICAL EQUIPMENT SHALL BE IN COMPLIANCE WITH NEC 110.
   B. THE EXCLUSIVELY DEDICATED SPACE EXTENDING FROM FLOOR TO STRUCTURAL CEILING WITH A WIDTH AND DEPTH OF THE PANELBOARD OR SWITCHBOARD MUST BE CLEAR OF ALL PIPING, DUCTS, EQUIPMENT FOREIGN TO THE ELECTRICAL EQUIPMENT OR ARCHITECTURAL APPURTENANCES IN ACCORDANCE WITH NEC 408.
5. WHEN ELECTRICAL BOXES ARE LOCATED IN VERTICAL FIRE RESISTIVE ASSEMBLIES, (CLASSIFIED AS FIRE/SMOKE AND SMOKE PARTITIONS), THEY SHALL BE INSTALLED WITHOUT AFFECTING THE FIRE CLASSIFICATION. ALL OF THE FOLLOWING CONDITIONS SHALL BE MET:
   A. ALL ELECTRICAL BOXES SHALL BE METALLIC.
   B. BOX OPENING SHALL OCCUR ONLY ON ONE SIDE OF FRAMING SPACE.
   C. BOX OPENING SHALL NOT EXCEED 16 SQUARE INCHES.
   D. ALL CLEARANCES BETWEEN OUTLET BOX AND GYPSUM BOARD SHALL BE COMPLETELY FILLED WITH JOINT COMPOUND (OR OTHER APPROVED MATERIAL).
   E. PROVIDE A WALL AROUND OUTLETS LARGER THAT 16 SQUARE INCHES. THE INTEGRITY OF THE WALL RATING SHALL BE MAINTAINED.
   F. THE TOTAL AGGREGATE SURFACE AREA OF THE BOXES SHALL NOT EXCEED 100 SQUARE INCHES PER 100 SQUARE FEET.
   G. OUTLET BOXES LOCATED ON OPPOSITE SIDES OF FIRE RESISTIVE ASSEMBLIES SHALL BE SEPARATED BY A MINIMUM HORIZONTAL DISTANCE OF 24 INCHES.
   H. OUTLET BOXES SHALL BE SECURELY FASTENED TO WALL FRAMING MEMBERS.
   I. THE OPENING IN THE GYPSUM BOARD FACING SHALL BE CUT NOT TO EXCEED 1/8 INCH BETWEEN THE EDGES OF THE OUTLET BOX AND THE EDGES OF THE OPENING.
6. ALL DEVICES SHALL BE MOUNTED VERTICAL, UNLESS OTHERWISE NOTED.
7. ALL RECEPTACLES SHALL BE MOUNTED SUCH THAT THE GROUND PIN IS MOUNTED DOWN.
8. THE NUMBER OF ARROWHEADS ON THE HOMERUNS DENOTES THE NUMBER OF CIRCUITS.
9. IT SHALL BE UNDERSTOOD THAT ALL WORK PERFORMED SHALL BE DONE BY A LICENSED ELECTRICAL CONTRACTOR AND IN A FIRST CLASS WORKMANLIKE MANNER. SAID CONTRACTOR SHALL MEET ALL REQUIREMENTS SET FORTH BY ANY LOCAL ORDINANCE AND/OR GOVERNING AUTHORITIES.
10. ENTIRE INSTALLATION SHALL BE IN ACCORDANCE WITH THE NATIONAL ELECTRICAL CODE, 2008 EDITION NEC AND THE LATEST EDITIONS OF ALL LOCAL CODES, RULES, AND ORDINANCES HAVING JURISDICTION.
11. IT SHALL BE THE RESPONSIBILITY OF THE ELECTRICAL CONTRACTOR TO PROVIDE ALL LABOR, MATERIALS, AND SUPERVISION NECESSARY TO ACCOMPLISH THE WORK SHOWN AND/OR NOTED ON THE DRAWINGS.
12. ALL REQUIRED INSURANCE SHALL BE PROVIDED FOR PROTECTION AGAINST PUBLIC LIABILITY AND PROPERTY DAMAGE FOR THE DURATION OF THE WORK.
13. ELECTRICAL CONTRACTOR SHALL VISIT THE JOB SITE PRIOR TO BID AND VERIFY ALL CONDITIONS, LOCATIONS, DIMENSIONS AND COUNTS AS SHOWN AND/OR NOTED ON THE DRAWINGS. THIS SHALL INCLUDE ANY AND ALL FABRICATIONS REQUIRED PRIOR TO INSTALLATION.
14. CONTRACTOR SHALL GUARANTEE ALL MATERIALS AND WORKMANSHIP FREE FROM DEFECTS FOR A PERIOD OF NOT LESS THAN (1) YEAR FROM DATE OF ACCEPTANCE, UNLESS INDICATED OR SPECIFIED OTHERWISE.
15. CORRECTION OF ANY DEFECTS SHALL BE COMPLETED WITHOUT ADDITIONAL CHARGE AND SHALL INCLUDE REPLACEMENT OR REPAIR OF ANY OTHER PHASE OF THE INSTALLATION WHICH MAY HAVE BEEN DAMAGED THEREBY.
16. THE ELECTRICAL CONTRACTOR SHALL BE RESPONSIBLE TO REPAIR TO ORIGINAL CONDITIONS ANY AND ALL DAMAGES TO BUILDING SURFACES, EQUIPMENT AND FURNISHINGS CAUSED DURING PERFORMANCE OF WORK.
17. ELECTRICAL CONTRACTOR SHALL NOT SCALE DRAWINGS. CONTRACTOR SHALL REFER TO ARCHITECTURAL PLANS AND ELEVATIONS FOR EXACT LOCATIONS OF ALL EQUIPMENT UNLESS NOTED OTHERWISE.
18. ALL OPENINGS FOR LIGHT FIXTURES IN CEILING SHALL BE PROTECTED IN A MANNER (PER ALL GOVERNING CODES) THAT WILL PROVIDE THE SAME RATING AS THE CEILING. (THIS APPLIES TO ALL FIRE RATED CEILINGS).
19. IT SHALL NOT BE THE INTENT OF THESE PLANS AND/OR SPECIFICATIONS TO SHOW EVERY MINOR DETAIL OF CONSTRUCTION. THE ELECTRICAL CONTRACTOR SHALL BE EXPECTED TO FURNISH AND INSTALL ALL ITEMS FOR A COMPLETE ELECTRICAL SYSTEM AND PROVIDE ALL REQUIREMENTS NECESSARY FOR EQUIPMENT TO BE PLACED IN PROPER WORKING ORDER.
20. ALL CONDUIT RUNS ARE SHOWN DIAGRAMMATICALLY. EXACT ROUTING SHALL BE DETERMINED IN THE FIELD, UNLESS OTHERWISE NOTED. THE ELECTRICAL CONTRACTOR SHALL PROVIDE AND INSTALL THE PROPER NUMBER OF CONDUCTORS IN ALL RACEWAYS AS REQUIRED TO ACCOMPLISH THE PROPER FUNCTIONING OF THE DEVICE OR EQUIPMENT AS SHOWN.
21. CONTRACTOR SHALL UPDATE ALL EXISTING PANEL DIRECTORIES TO REFLECT EXISTING CONDITIONS. TRACE CIRCUITS AS REQUIRED TO PROVIDE ACCURATE PANEL INFORMATION.
22. THE CONTRACTOR SHALL OBTAIN A FIRE ALARM PERMIT PRIOR TO INSTALLING OR MODIFYING THE BUILDING FIRE ALARM SYSTEM.

ELECTRICAL DRAWING INDEX

SHEET	DESCRIPTION	ISSUED
E0.01	ELECTRICAL LEGEND, NOTES AND INDEX	Yes
E1.01	DEMOLITION PLAN - LIGHTING	Yes
E1.02	DEMOLITION PLAN - POWER	Yes
E2.01	OVERALL PLAN - SYSTEMS	Yes
E2.02	FLOOR PLAN - LIGHTING	Yes
E2.03	FLOOR PLAN - POWER	Yes
E2.04	ROOF PLAN - ELECTRICAL	Yes
E3.01	ELECTRICAL DETAILS, RISER DIAGRAMS AND SCHEDULES	Yes
E4.01	ELECTRICAL SPECIFICATIONS	Yes

GS&P
Design Services For The Built Environment

Atlanta
Birmingham
Charlotte
Cincinnati
Columbus
Dallas
Fort Lauderdale
Knoxville
Jackson
Jacksonville
Louisville
Memphis
Nashville
Richmond
Tampa

GRESHAM SMITH AND PARTNERS
5220 Belfort Road
Suite 100
Jacksonville, FL 32256
904.332.6699
FIRM'S FLORIDA CERT. NO. AAP000034/EB0003806
IB26000797

FLAGLER HOSPITAL
Excellence As A Way Of Life

IS PHASE II

CONSTRUCTION DOCUMENTS

SEAL:
Gerald J. Versluys, P.E.
Florida License #59177

REVISION

No. -	Date -	Revision

ELECTRICAL LEGEND NOTES AND INDEX

E0.01

PROJECT:27432.00
DATE: AUG 31, 2012

L:\2012-Jobs\812082-Flagler Hsp MOB (S Exp\CAD-MEP\Sheets E0.01.dwg 8/31/2012 12:47:18 PM brian.jones

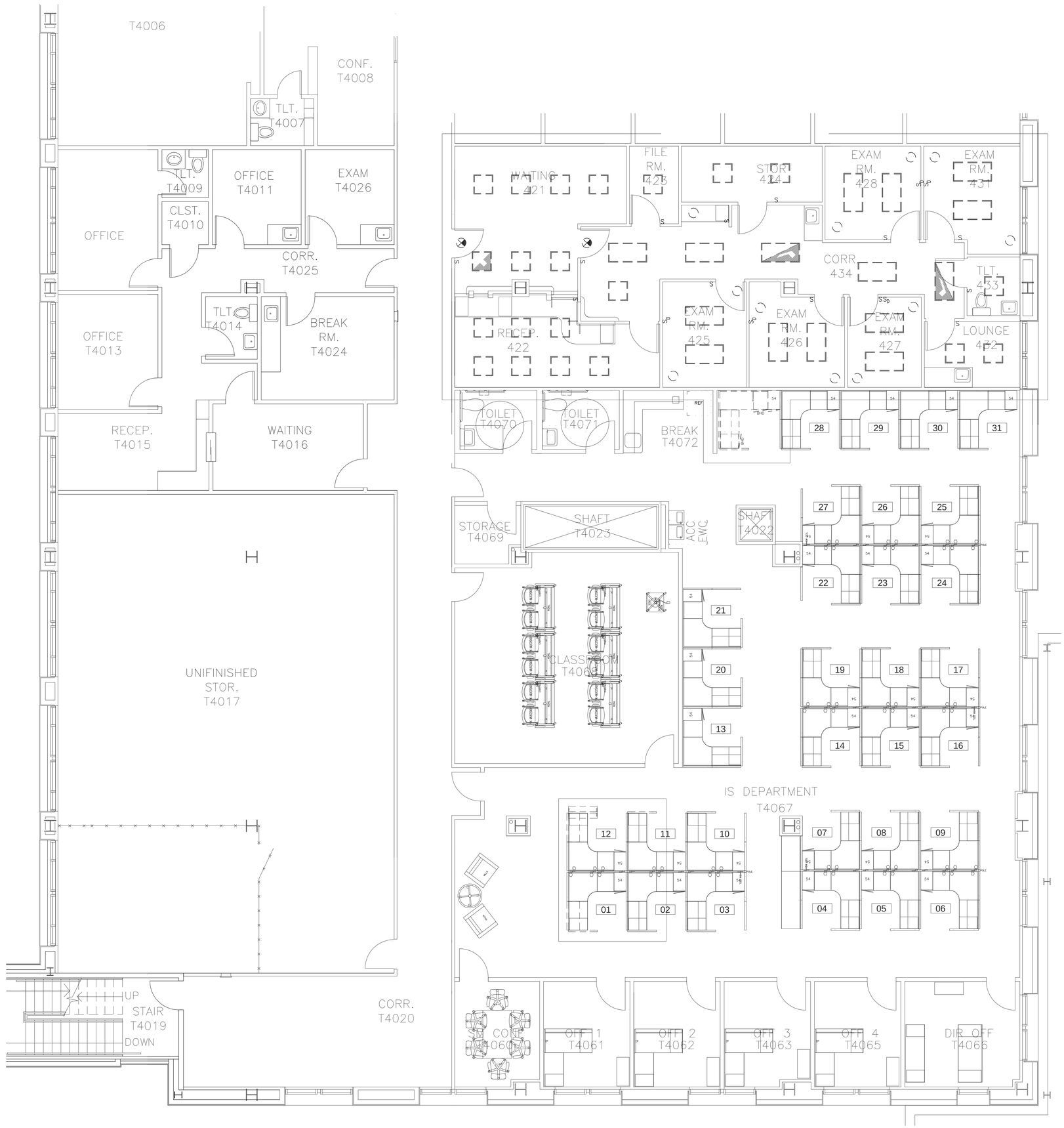

DEMOLITION PLAN – LIGHTING

SCALE: 1/4" = 1'-0"

GENERAL DEMOLITION NOTES

1. ALL ITEMS WITHIN ROOMS TO BE DEMOLISHED ARE TO BE REMOVED ALONG WITH ALL ITEMS ASSOCIATED WITH THOSE ITEMS BACK TO SOURCE OR NEXT ITEM TO REMAIN. THIS SHALL INCLUDE BUT NOT BE LIMITED TO WIRING, CONDUIT, JUNCTION BOXES, LIGHTING FIXTURES, WIRING DEVICES, RECEPTACLES, SYSTEM DEVICES, ETC.
2. ABANDONED CONDUIT SHALL BE REMOVED WHERE POSSIBLE. ABANDONED CONDUIT WHICH CAN NOT BE REMOVED SHALL HAVE WIRING REMOVED.
3. WHERE EXISTING CONDUITS ARE REUSED, EXISTING WIRING SHALL BE REMOVED. CONDUIT SHALL BE SWABBED OUT AND NEW WIRING INSTALLED.
4. IF ANY EXISTING ELECTRICAL CONDUIT THAT IS TO REMAIN IN OPERATION BECOMES ISOLATED DUE TO PHASING OR BY THE REMOVAL OF WALLS, CEILINGS, ELECTRICAL EQUIPMENT, ETC. IT SHALL BE THE CONTRACTOR'S RESPONSIBILITY TO REROUTE AND/OR RECONNECT THE EQUIPMENT SO THAT THE SYSTEM REMAINS OPERABLE AS SOON AS POSSIBLE.
5. IT SHALL BE THE RESPONSIBILITY OF THE ELECTRICAL CONTRACTOR TO RELOCATE AND RECONNECT EXISTING ELECTRICAL CIRCUITS AS REQUIRED TO AVOID NEW CONSTRUCTION.
6. FOR ANY CUTTING AND PATCHING OF WALLS AND CEILINGS REQUIRED, THE CONTRACTOR SHALL BE RESPONSIBLE. THE WORK SHALL BE PERFORMED BY CRAFTSMEN SKILLED IN THAT TRADE.
7. ANY ITEMS ABOVE CEILING IN EXISTING CORRIDORS OR ROOMS WHICH NEEDS TO BE RELOCATED FOR INSTALLATION OF ELECTRICAL EQUIPMENT SHALL BE RELOCATED AND RECONNECTED AS REQUIRED. ELECTRICAL ITEMS SUCH AS EXISTING COMMUNICATIONS CABLE LAYING ON EXISTING CEILING SHALL BE INDEPENDENTLY SUPPORTED WHILE THE EXISTING CEILINGS ARE BEING DEMOLISHED AND REPLACED. SUPPORT SHALL KEEP COMMUNICATIONS CABLE AND OTHER ITEMS CABLE 12" ABOVE CEILING TO ALLOW FOR PROPER SPACE TO INSTALL NEW CEILINGS. THIS INCLUDES BUT IS NOT LIMITED TO CONDUIT AND WIRE FOR LIGHTING, POWER, NURSE CALL, FIRE ALARM, PAGING, COMPUTER SYSTEMS, SECURITY AND HVAC CONTROLS.
8. ANY ELECTRICAL ITEMS ABOVE EXISTING CEILING WHICH NEEDS TO BE RELOCATED OR SUPPORTED TO REMAIN IN SERVICE DUE TO DEMOLITION OF EXISTING CEILING SHALL BE RELOCATED AND RECONNECTED AS REQUIRED.
9. BEFORE DEMOLISHING ANY CONDUIT AND WIRING, THE CONTRACTOR SHALL VERIFY WHAT IT SERVES TO ENSURE SERVICE IS NOT DISRUPTED TO ITEMS OUTSIDE OF THE WORK AREA.
10. IT IS STRONGLY RECOMMENDED THAT THE CONTRACTOR VISIT THE SITE PRIOR TO BID TO ASCERTAIN EXISTING CONDITIONS AS HE WILL BE RESPONSIBLE FOR EXISTING CONDITIONS AS REQUIRED IN OTHER NOTES.

TLC ENGINEERING FOR ARCHITECTURE
1650 Prudential Drive
Suite 200
Jacksonville, Florida 32207
Phone: 904-306-9111
Fax: 904-306-9117
www.tlc-engineers.com

© Copyright 2011 TLC Engineering for Architecture, Inc.

COA 15 TLC NO:812082
DRAWN BY: JDH CHECKED BY: GJV
APPROVED BY: GJV

GS&P
Design Services For The Built Environment
Atlanta
Birmingham
Charlotte
Cincinnati
Columbus
Dallas
Fort Lauderdale
Knoxville
Jackson
Jacksonville
Louisville
Memphis
Nashville
Richmond
Tampa

GRESHAM SMITH AND PARTNERS
5220 Belfort Road
Suite 100
Jacksonville, FL 32256
904.332.6699
FIRM'S FLORIDA CERT. NO.
AAP000034/EB0003806
IB26000797

FLAGLER HOSPITAL
Excellence As A Way Of Life

IS PHASE II

CONSTRUCTION DOCUMENTS

SEAL:
Gerald J. Versluys, P.E.
Florida License #59177

REVISION

No.	Date	Revision

DEMOLITION PLAN LIGHTING

E1.01

PROJECT:27432.00
DATE: AUG 31, 2012

L:\2012-Jobs\812082-Flagler Hsp MOB IS Exp\CAD-MEP\Sheets E1.01.dwg 8/31/2012 12:47:33 PM brian.jones

TLC ENGINEERING FOR ARCHITECTURE
1650 Prudential Drive
Suite 200
Jacksonville, Florida 32207
Phone: 904-306-9111
Fax: 904-306-9117
www.tlc-engineers.com
© Copyright 2011 TLC Engineering for Architecture, Inc.

COA 15 TLC NO:812082
DRAWN BY: JDH CHECKED BY: GJV
APPROVED BY: GJV

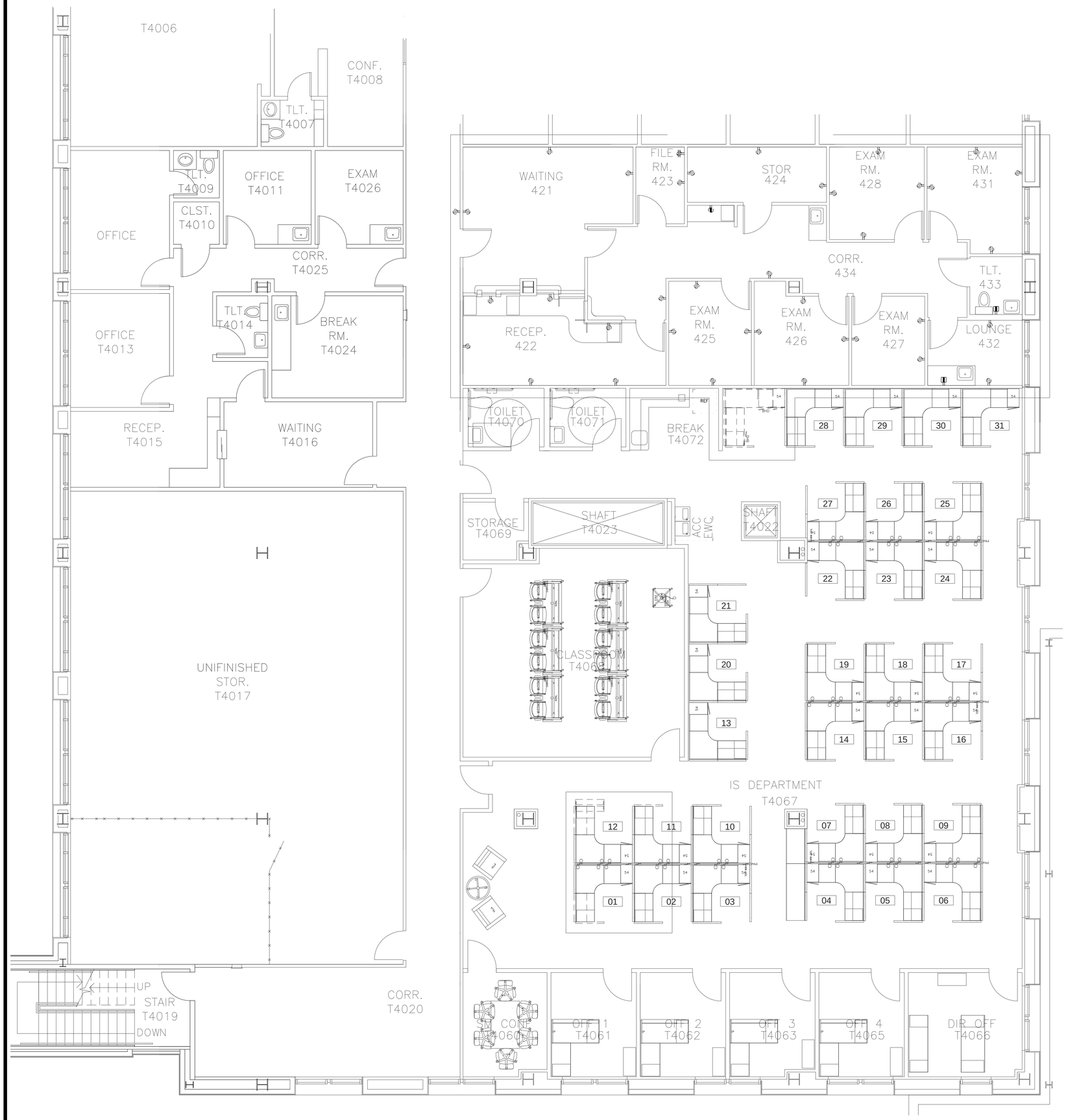

DEMOLITON PLAN – POWER
SCALE: 1/4" = 1'-0"

GENERAL DEMOLITION NOTES

1. ALL ITEMS WITHIN ROOMS TO BE DEMOLISHED ARE TO BE REMOVED ALONG WITH ALL ITEMS ASSOCIATED WITH THOSE ITEMS BACK TO SOURCE OR NEXT ITEM TO REMAIN. THIS SHALL INCLUDE BUT NOT BE LIMITED TO WIRING, CONDUIT, JUNCTION BOXES, LIGHTING FIXTURES, WIRING DEVICES, RECEPTACLES, SYSTEM DEVICES, ETC.
2. ABANDONED CONDUIT SHALL BE REMOVED WHERE POSSIBLE. ABANDONED CONDUIT WHICH CAN NOT BE REMOVED SHALL HAVE WIRING REMOVED.
3. WHERE EXISTING CONDUITS ARE REUSED, EXISTING WIRING SHALL BE REMOVED. CONDUIT SHALL BE SWABBED OUT AND NEW WIRING INSTALLED.
4. IF ANY EXISTING ELECTRICAL CONDUIT THAT IS TO REMAIN IN OPERATION BECOMES ISOLATED DUE TO PHASING OR BY THE REMOVAL OF WALLS, CEILINGS, ELECTRICAL EQUIPMENT, ETC. IT SHALL BE THE CONTRACTOR'S RESPONSIBILITY TO REROUTE AND/OR RECONNECT THE EQUIPMENT SO THAT THE SYSTEM REMAINS OPERABLE AS SOON AS POSSIBLE.
5. IT SHALL BE THE RESPONSIBILITY OF THE ELECTRICAL CONTRACTOR TO RELOCATE AND RECONNECT EXISTING ELECTRICAL CIRCUITS AS REQUIRED TO AVOID NEW CONSTRUCTION.
6. FOR ANY CUTTING AND PATCHING OF WALLS AND CEILINGS REQUIRED, THE CONTRACTOR SHALL BE RESPONSIBLE. THE WORK SHALL BE PERFORMED BY CRAFTSMEN SKILLED IN THAT TRADE.
7. ANY ITEMS ABOVE CEILING IN EXISTING CORRIDORS OR ROOMS WHICH NEEDS TO BE RELOCATED FOR INSTALLATION OF ELECTRICAL EQUIPMENT SHALL BE RELOCATED AND RECONNECTED AS REQUIRED. ELECTRICAL ITEMS SUCH AS EXISTING COMMUNICATIONS CABLE LAYING ON EXISTING CEILING SHALL BE INDEPENDENTLY SUPPORTED WHILE THE EXISTING CEILINGS ARE BEING DEMOLISHED AND REPLACED. SUPPORT SHALL KEEP COMMUNICATIONS CABLE AND OTHER ITEMS CABLE 12" ABOVE CEILING TO ALLOW FOR PROPER SPACE TO INSTALL NEW CEILINGS. THIS INCLUDES BUT IS NOT LIMITED TO CONDUIT AND WIRE FOR LIGHTING, POWER, NURSE CALL, FIRE ALARM, PAGING, COMPUTER SYSTEMS, SECURITY AND HVAC CONTROLS.
8. ANY ELECTRICAL ITEMS ABOVE EXISTING CEILING WHICH NEEDS TO BE RELOCATED OR SUPPORTED TO REMAIN IN SERVICE DUE TO DEMOLITION OF EXISTING CEILING SHALL BE RELOCATED AND RECONNECTED AS REQUIRED.
9. BEFORE DEMOLISHING ANY CONDUIT AND WIRING, THE CONTRACTOR SHALL VERIFY WHAT IT SERVES TO ENSURE SERVICE IS NOT DISRUPTED TO ITEMS OUTSIDE OF THE WORK AREA.
10. IT IS STRONGLY RECOMMENDED THAT THE CONTRACTOR VISIT THE SITE PRIOR TO BID TO ASCERTAIN EXISTING CONDITIONS AS HE WILL BE RESPONSIBLE FOR EXISTING CONDITIONS AS REQUIRED IN OTHER NOTES.

G S & P
Design Services For The Built Environment
Atlanta
Birmingham
Charlotte
Cincinnati
Columbus
Dallas
Fort Lauderdale
Knoxville
Jackson
Jacksonville
Louisville
Memphis
Nashville
Richmond
Tampa
GRESHAM SMITH AND PARTNERS
5220 Belfort Road
Suite 100
Jacksonville, FL 32256
904.332.6699
FIRM'S FLORIDA CERT. NO.
AAP000034/EB0003806
IB26000797

FLAGLER HOSPITAL
Excellence As A Way Of Life

IS PHASE II

CONSTRUCTION DOCUMENTS

SEAL:
Gerald J. Versluys, P.E.
Florida License #59177

REVISION

No.	Date	Revision

DEMOLITION PLAN POWER

E1.02

PROJECT:27432.00
DATE: AUG 31, 2012

L:\2012-Jobs\812082-Flagler Hsp MOB IS Exp\CAD-MEP\Sheets E1.02.dwg 8/31/2012 12:47:46 PM brian.jones

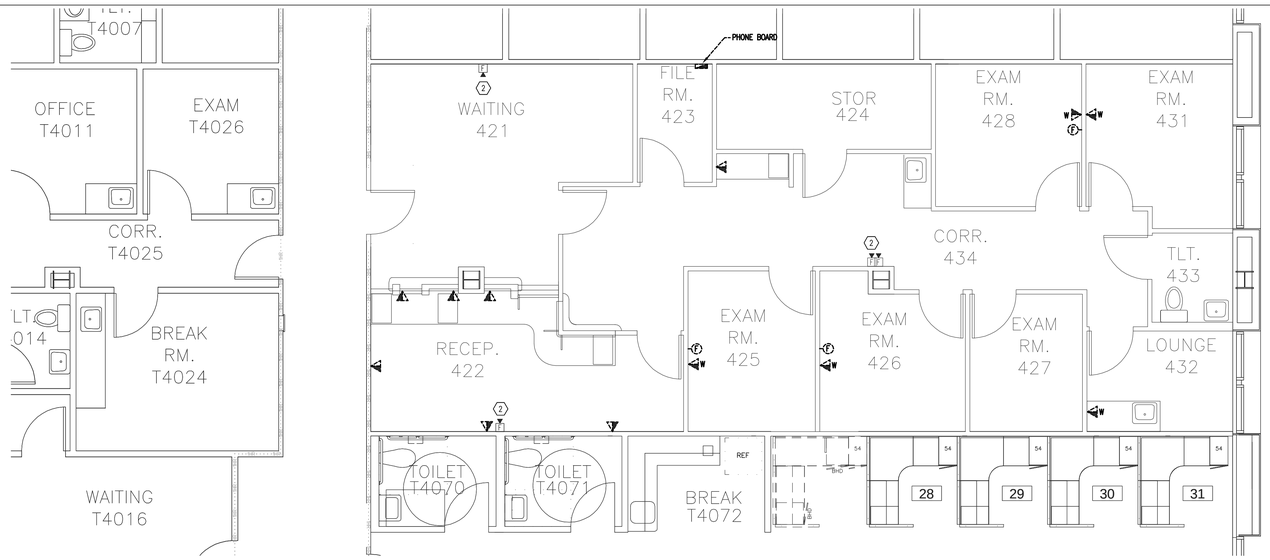

DEMOLITION PLAN – SYSTEMS
SCALE: 1/4" = 1'-0"

SYSTEMS DEMOLITION PLAN NOTES:

1. DEMO ALL DEVICES AND REMOVE CABLE BACK TO SOURCE. NO ABANDONED CABLE SHALL REMAIN.
2. EXISTING FIRE ALARM HORN/STROBE TO REMAIN.

GENERAL SYSTEMS PLAN NOTES:

1. REFER TO ARCHITECTURAL ELEVATIONS FOR FINAL MOUNTING HEIGHTS OF ALL DEVICES. UNLESS NOTED OTHERWISE, ARCHITECTURAL ELEVATIONS SHALL DICTATE MOUNTING HEIGHTS OF ALL FIXTURES.
2. VERIFY AND COORDINATE EXACT ELECTRICAL REQUIREMENTS OF ALL EQUIPMENT WITH MANUFACTURER'S RECOMMENDATIONS PRIOR TO INSTALLATION OF EQUIPMENT.
3. FIRE ALARM CONTRACTOR SHALL FULLY TEST ALL INITIATING DEVICES WITHIN THE SMOKE COMPARTMENT TO ENSURE THAT ALL DEVICES ARE CORRECTLY ANNUNCIATING THE CORRECT SMOKE COMPARTMENT IDENTIFICATION, AS SHOWN ON THE LIFE SAFETY PLAN. CONTRACTOR SHALL CORRECT ANY AND ALL DISCREPANCIES FOUND DURING SAID TESTING PROCEDURE.
4. COORDINATE LOCATIONS AND MOUNTING HEIGHTS OF ALL DEVICES WITH ARCHITECTURAL DRAWINGS AND CASEWORK ELEVATION DRAWINGS.

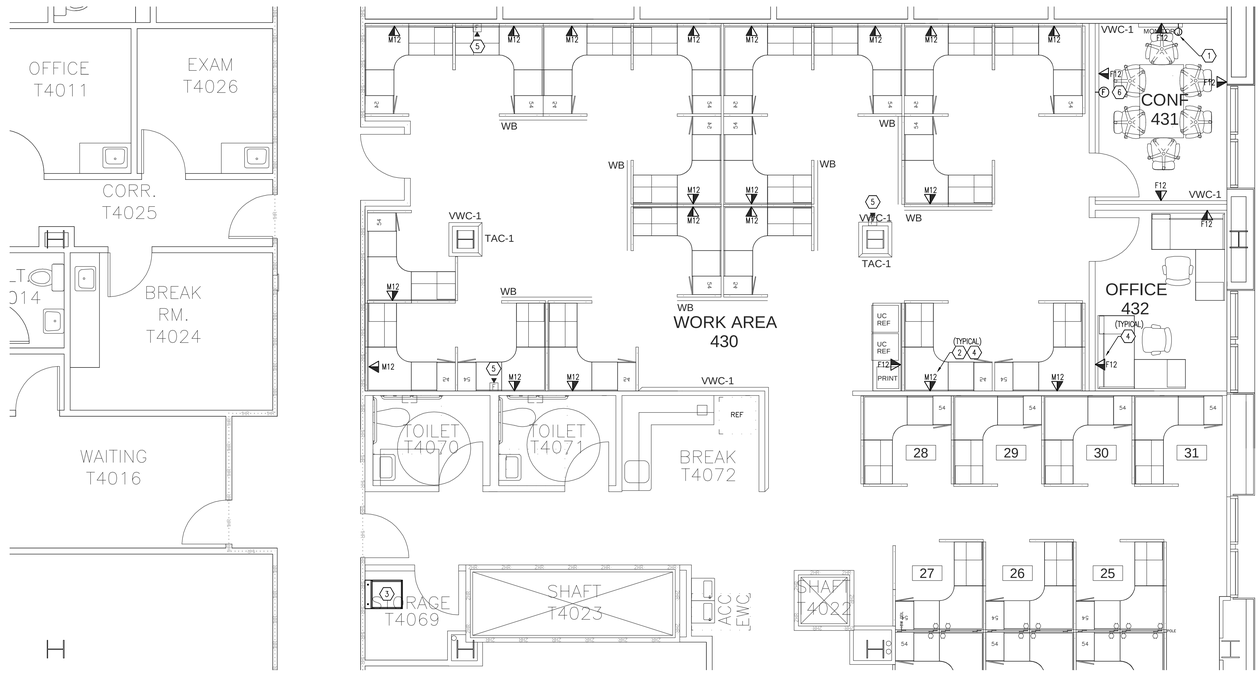

FLOOR PLAN – SYSTEMS
SCALE: 1/4" = 1'-0"

SYSTEMS FLOOR PLAN NOTES:

1. PROVIDE DOUBLE GANG J-BOX FOR A/V CONNECTION. STUB (2) 1" CONDUITS ABOVE CEILING.
2. PROVIDE VOICE/DATA OUTLETS AND CONNECT INTO SYSTEMS FURNITURE PER MANUFACTURER'S RECOMMENDATIONS.
3. EXISTING DATA CABINET. PROVIDE NEW 48 PATCH PANEL FOR DATA CABLES. CONNECT VOICE CABLES TO EXISTING PATCH PANEL.
4. ALL CABLES SHALL TERMINATE AT EXISTING DATA CABINET IN ROOM T4069.
5. EXISTING FIRE ALARM HORN/STROBE TO REMAIN.
6. PROVIDE NEW FIRE ALARM STROBE TO MATCH EXISTING SYSTEM AND CONNECT TO FIRE ALARM SYSTEM AS REQUIRED.

SYSTEMS DATA ROOM NOTES:

1. ALL CABLES SHALL TERMINATE AT EXISTING DATA CABINET IN ROOM T4069.
2. SERVER EQUIPMENT RACKS RELOCATED FROM JAKADOFSKY BUILDING, 2ND FLOOR.
3. PROVIDE LADDER RACK 12" WIDE. MOUNT 12" ABOVE TOP OF CABINETS.
4. PROVIDE (2) SLEEVES FOR CABLE PATHWAYS.
5. PROVIDE TELECOM GROUNDING BUSBAR. CONNECT TO MAIN BUILDING GROUND. BOND ALL RACKS, LADDER RACK, AND SLEEVES TO BUSBAR.
6. PROVIDE WALL MOUNTED FIBER TERMINATION CABINET (WIC) WITH (1) 6-FIBER SC DUPLEX ADAPTER PLATE. PROVIDE (1) 6-FIBER, OFNP, TIGHT BUFFERED FIBER CABLE TO FOURTH FLOOR ELECTRIC ROOM. TERMINATE NEXT TO EXISTING FIBER RISER.

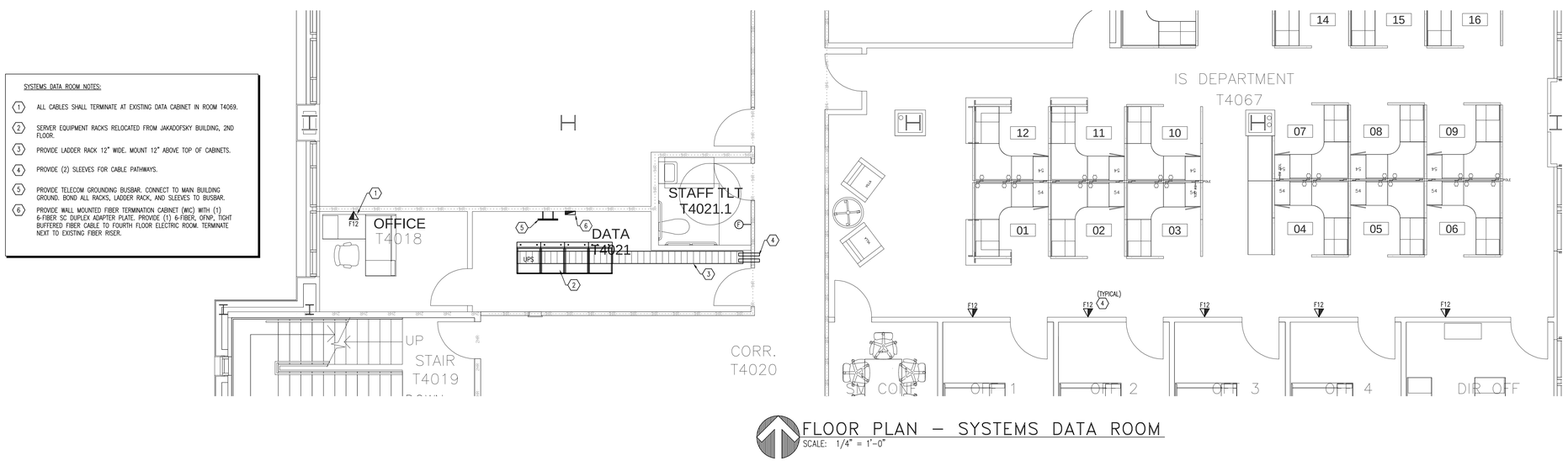

FLOOR PLAN – SYSTEMS DATA ROOM
SCALE: 1/4" = 1'-0"

1650 Prudential Drive
Suite 200
Jacksonville, Florida 32207
Phone: 904-306-9111
Fax: 904-306-9117
www.tlc-engineers.com
© Copyright 2011 TLC Engineering for Architecture, Inc.
COA 15 TLC NO:812082
DRAWN BY: KJJ CHECKED BY: TDN
APPROVED BY: TDN

G S & P
Design Services For The Built Environment
Atlanta
Birmingham
Charlotte
Cincinnati
Columbus
Dallas
Fort Lauderdale
Knoxville
Jackson
Jacksonville
Louisville
Memphis
Nashville
Richmond
Tampa

GRESHAM SMITH AND PARTNERS
5220 Belfort Road
Suite 100
Jacksonville, FL 32256
904.332.6699
FIRM'S FLORIDA CERT. NO. AAP000034/EB0003806 IB26000797

FLAGLER HOSPITAL
Excellence As A Way Of Life

IS PHASE II

CONSTRUCTION DOCUMENTS

SEAL:
Gerald J. Versluys, P.E.
Florida License #59177

REVISION

No.	Date	Revision

OVERALL FLOOR PLAN SYSTEMS

E2.01

PROJECT:27432.00
DATE: AUG 31, 2012

L:\2012-Jobs\812082-Flagler Hsp MOB IS Exp\CAD-MEP\Sheets E2.01.dwg 8/31/2012 1:48:10 PM djparker

TLC ENGINEERING FOR ARCHITECTURE
1650 Prudential Drive
Suite 200
Jacksonville, Florida 32207
Phone: 904-306-9111
Fax: 904-306-9117
www.tlc-engineers.com
© Copyright 2011 TLC Engineering for Architecture, Inc.

COA 15 TLC NO:812082
DRAWN BY: JDH CHECKED BY: GJV
APPROVED BY: GJV

GENERAL LIGHTING NOTES

1. CONNECT EXIT LIGHTS AND EMERGENCY BALLASTS OF FIXTURES DENOTED AS EMERGENCY TO UNSWITCHED (HOT) LEG OF LIGHTING CIRCUIT.
2. ALL LIGHT FIXTURE SWITCHES SHALL BE MOUNTED AS CLOSE TO ADJACENT DOOR FRAME AS POSSIBLE.
3. SEE ARCHITECTURAL REFLECTED CEILING PLAN FOR EXACT LIGHTING FIXTURE LOCATIONS.

LIGHTING NOTES

(1) CONNECT TO EXISTING AREA LIGHTING CIRCUIT. CONTRACTOR SHALL VERIFY EXACT CIRCUIT AFTER DEMOLITION.

FLOOR PLAN – LIGHTING
SCALE: 1/4" = 1'-0"

G S & P
Design Services For The Built Environment
Atlanta
Birmingham
Charlotte
Cincinnati
Columbus
Dallas
Fort Lauderdale
Knoxville
Jackson
Jacksonville
Louisville
Memphis
Nashville
Richmond
Tampa
GRESHAM SMITH AND PARTNERS
5220 Belfort Road
Suite 100
Jacksonville, FL 32256
904.332.6699
FIRM'S FLORIDA CERT. NO.
AAP000034/EB0003806
IB26000797

FLAGLER HOSPITAL
Excellence As A Way Of Life

IS PHASE II

CONSTRUCTION DOCUMENTS

SEAL:
Gerald J. Versluys, P.E.
Florida License #59177

REVISION

No. -	Date -	Revision

FLOOR PLAN
LIGHTING

E2.02

PROJECT:27432.00
DATE: AUG 31, 2012

L:\2012-Jobs\812082-Flagler Hsp MOB IS Exp\CAD-MEP\Sheets E2.02.dwg 8/31/2012 1:45:21 PM djparker

TLC ENGINEERING FOR ARCHITECTURE
1650 Prudential Drive
Suite 200
Jacksonville, Florida 32207
Phone: 904-306-9111
Fax: 904-306-9117
www.tlc-engineers.com
© Copyright 2011 TLC Engineering for Architecture, Inc.
COA 15 TLC NO:812082
DRAWN BY: JDH CHECKED BY: GJV
APPROVED BY: GJV

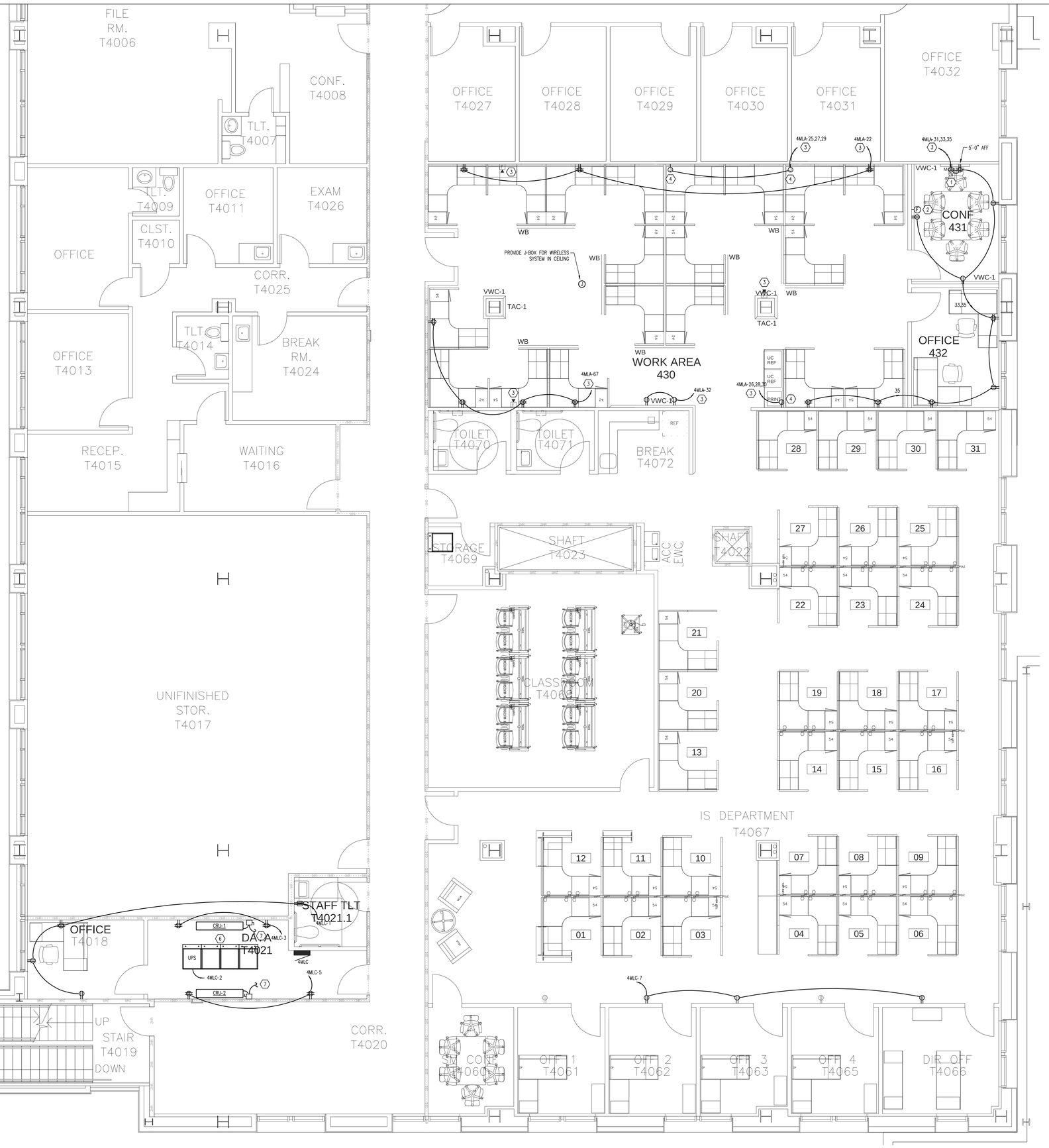

FLOOR PLAN – POWER
SCALE: 1/4" = 1'-0"

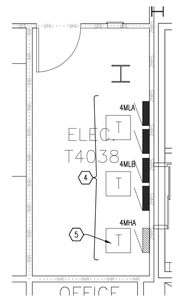

ELECTRICAL ROOM
SCALE: 1/4" = 1'-0"

GENERAL POWER NOTES

1. ALL WORK SHALL BE COORDINATED WITH OTHER TRADES. REFER TO ARCHITECTURAL AND MECHANICAL DRAWINGS IN ORDER TO BE AWARE OF CONDITIONS AFFECTING ELECTRICAL WORK.
2. EXAMINE EXISTING CONDITIONS PRIOR TO BID AND COMPARE WITH NEW WORK. REPORT ANY OBSERVED DISCREPANCIES. ACCOUNT FOR WORK DIFFICULTIES RELATED TO EXISTING CONDITIONS.
3. EXISTING ELECTRICAL ITEMS NOT INTENDED FOR REMOVAL SHALL BE MAINTAINED IN PRESENT CONDITION AND STATE OF OPERATION THROUGH-OUT CONTRUCTION. ANY DISRUPTION OF OPERATION REQUIRED FOR INSTALLATION OF OF NEW WORK SHALL BE PLANNED TO BE AS BRIEF AS POSSIBLE AND ARRANGED AT LEAST ONE WEEK IN ADVANCE WITH THE OWNER.
4. ALL WORK SHALL COMPLY WITH STATE AND LOCAL CODES AS ENFORCED BY THE AUTHORITY HAVING JURISDICTION.
5. WHERE RECEPTACLES, TELEPHONE AND DATA OUTLETS ARE SHOWN GROUPED TOGETHER, CONTRACTOR SHALL MOUNT DEVICES AS CLOSE TOGETHER AS POSSIBLE.
6. COORDINATE WITH OWNER ALL ROUGH-IN LOCATIONS AND CONNECTION REQUIREMENTS OF OWNER FURNISHED EQUIPMENT. HAVE WORKERS AVAILABLE UPON EQUIPMENT DELIVERY TO PROVIDE CONNECTIONS UNDER THE SUPERVISION OF THE OWNER OR OWNERS REPRESENTATIVES.
7. OUTLETS AND DEVICES TO BE INSTALLED IN AREAS WITH MILLWORK, FURNITURE OR EQUIPMENT SHALL BE LOCATED IN A MANNER TO READILY PERMIT ACCESS AND USE. CONTRACTOR SHALL COORDINATE LOCATIONS AND MOUNTING HEIGHTS WITH ARCHITECTURAL DRAWINGS AND MOUNT DEVICES WITHIN KNEE SPACES OF CABINET WORK.
8. CONTRACTOR SHALL PROVIDE A SEPERATE NEUTRAL FOR EACH RECEPTACLE CIRCUIT.

POWER NOTES

1. RECEPTACLE FOR CONNECTION TO TV. COORDINATE EXACT LOCATION AND MOUNTING HEIGHT WITH ARCHITECT.
2. PROVIDE NEW FIRE ALARM STROBE TO MATCH EXISTING SYSTEM AND CONNECT TO FIRE ALARM SYSTEM AS REQUIRED.
3. CONNECT HOMERUN TO EXISTING 1P/20A SPARE CIRCUIT BREAKER. CONTRACTOR SHALL VERIFY EXACT CIRCUIT NUMBERS AND UPDATE PANEL DIRECTORY TO REFLECT NEW CIRCUITING.
4. EXISTING PANELS AND TRANSFORMERS TO REMAIN.
5. EXISTING UNUSED 37.5 KVA TRANSFORMER IN ELECTRICAL ROOM TO BE USED FOR SERVER ROOM POWER. REMOVE EXISTING UNUSED SECONDARY FEEDER ALONG WITH ALL ASSOCIATED WIRING AND CONDUIT BACK TO TRANSFORMER. SEE PARTIAL POWER RISER DIAGRAM, SHEET E3.01 FOR NEW WORK.
6. EXISTING RELOCATED UPS AND SERVER RACKS PROVIDED BY OWNER, INSTALLED BY ELECTRICAL CONTRACTOR. COORDINATE EXACT REQUIREMENTS WITH OWNER.
7. PROVIDE A 2P/30A NON FUSED DISCONNECT SWITCH IN A NEMA 1 ENCLOSURE AND RUN WIRING AND CONDUIT UP TO UNIT ON ROOF. COORDINATE EXACT CONNECTION REQUIREMENTS WITH MANUFACTURER.

G S & P
Design Services For The Built Environment
Atlanta
Birmingham
Charlotte
Cincinnati
Columbus
Dallas
Fort Lauderdale
Knoxville
Jackson
Jacksonville
Louisville
Memphis
Nashville
Richmond
Tampa
GRESHAM SMITH AND PARTNERS
5220 Belfort Road
Suite 100
Jacksonville, FL 32256
904.332.6699
FIRM'S FLORIDA CERT. NO.
AAP000034/EB0003806
IB26000797

FLAGLER HOSPITAL
Excellence As A Way Of Life

IS PHASE II

CONSTRUCTION DOCUMENTS

SEAL:
Gerald J. Versluys, P.E.
Florida License #59177

REVISION

No. -	Date -	Revision

FLOOR PLAN
POWER

E2.03

PROJECT:27432.00
DATE: AUG 31, 2012

L:\2012-Jobs\812082-Flagler Hsp MOB IS Exp\CAD-MEP\Sheets E2.03.dwg 8/31/2012 1:45:33 PM djpoker

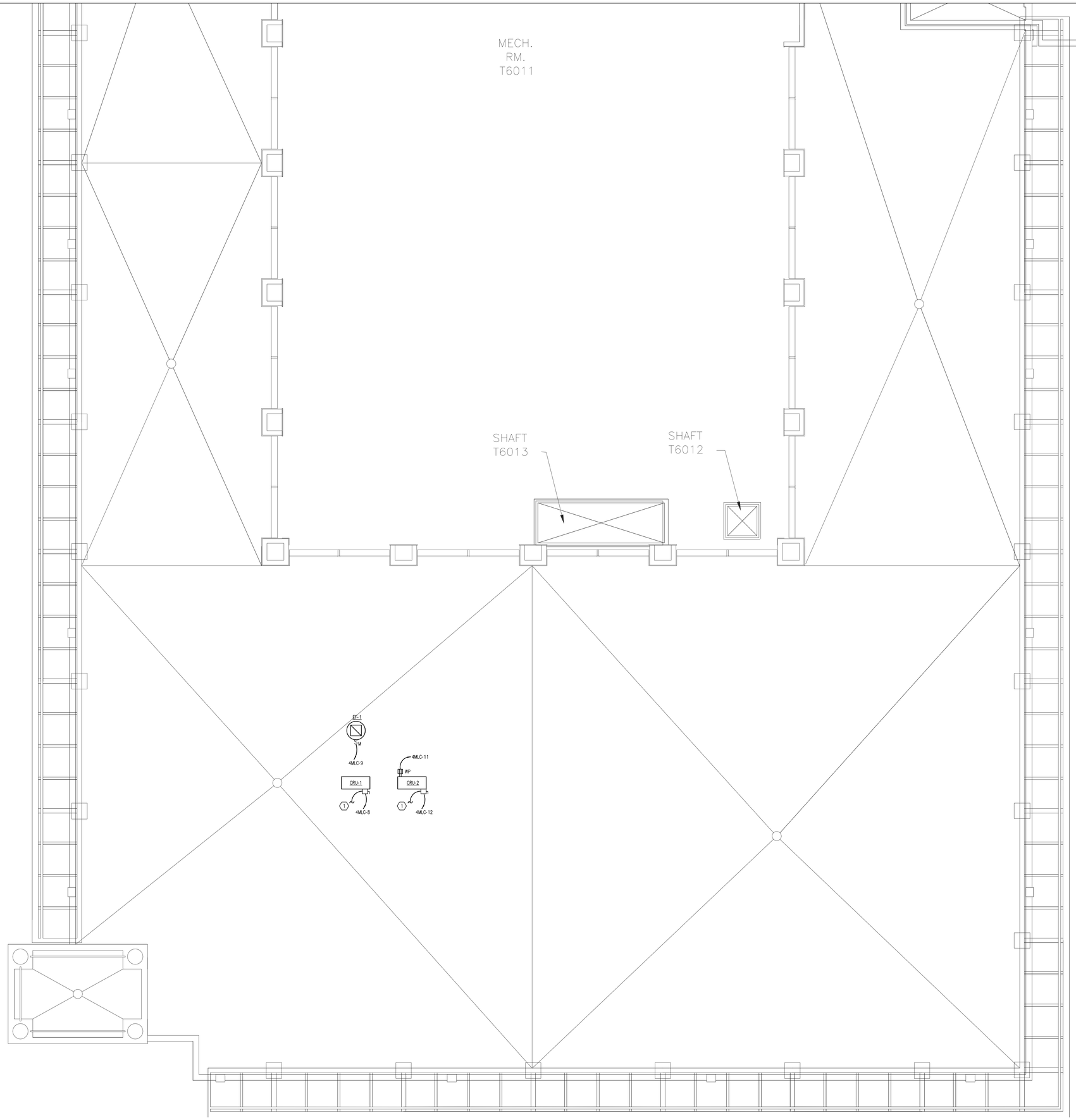

ROOF POWER NOTES

1. PROVIDE A 2P/30A NON FUSED DISCONNECT SWITCH IN A NEMA 3R ENCLOSURE AND RUN WIRING AND CONDUIT DOWN TO UNIT IN SERVER ROOM. COORDINATE EXACT CONNECTION REQUIREMENTS WITH MANUFACTURER.

ROOF PLAN – ELECTRICAL

SCALE: 1/4" = 1'-0"

TLC ENGINEERING FOR ARCHITECTURE
1650 Prudential Drive
Suite 200
Jacksonville, Florida 32207
Phone: 904-306-9111
Fax: 904-306-9117
www.tlc-engineers.com
© Copyright 2011 TLC Engineering for Architecture, Inc.

COA 15 TLC NO:812082
DRAWN BY: JDH CHECKED BY: GJV
APPROVED BY: GJV

G S & P
Design Services For The Built Environment
Atlanta
Birmingham
Charlotte
Cincinnati
Columbus
Dallas
Fort Lauderdale
Knoxville
Jackson
Jacksonville
Louisville
Memphis
Nashville
Richmond
Tampa
GRESHAM SMITH AND PARTNERS
5220 Belfort Road
Suite 100
Jacksonville, FL 32256
904.332.6699
FIRM'S FLORIDA CERT. NO.
AAP000034/EB0003806
IB26000797

FLAGLER HOSPITAL
Excellence As A Way Of Life

IS PHASE II

CONSTRUCTION DOCUMENTS

SEAL:

Gerald J. Versluys, P.E.
Florida License #59177

REVISION

No. -	Date -	Revision

ROOF PLAN ELECTRICAL

E2.04

PROJECT:27432.00
DATE: AUG 31, 2012

L:\2012-Jobs\812082-Flagler Hsp MOB IS Exp\CAD-MEP\Sheets E2.04.dwg 8/31/2012 12:53:40 PM don.hammond

TLC ENGINEERING FOR ARCHITECTURE
1650 Prudential Drive
Suite 200
Jacksonville, Florida 32207
Phone: 904-306-9111
Fax: 904-306-9117
www.tlc-engineers.com
© Copyright 2011 TLC Engineering for Architecture, Inc.
COA 15 TLC NO:812082
DRAWN BY: KJJ CHECKED BY: TDN
APPROVED BY: TDN

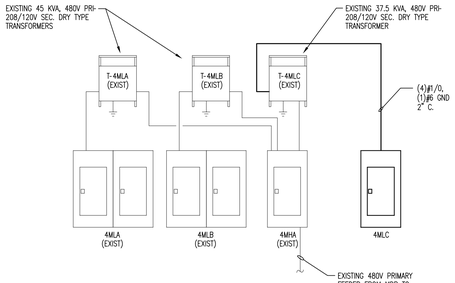

PARTIAL POWER RISER DIAGRAM
No Scale — 6

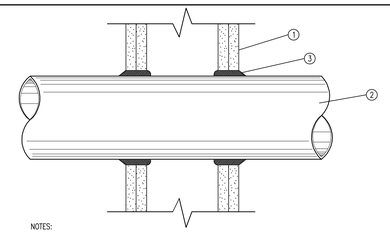

NOTES:

1. WALL ASSEMBLY - THE 1, 2, 3, OR 4 HOUR FIRE-RATED GYPSUM WALLBOARD/STUD WALL ASSEMBLY SHALL BE CONSTRUCTED OF THE MATERIALS AND IN THE MANNER DESCRIBED IN THE INDIVIDUAL U300 OR U400 SERIES WALL OR PARTITION DESIGNS IN THE UL FIRE RESISTANCE DIRECTORY.
2. CONDUIT - NOM 4" DIA OR SMALLER STEEL ELECTRICAL METALLIC TUBING. A MAX OF ONE CONDUIT IS PERMITTED IN THE FIRESTOP SYSTEM. CONDUIT TO BE INSTALLED NEAR CENTER OF STUD CAVITY WIDTH AND TO BE RIGIDLY SUPPORTED ON BOTH SIDES OF WALL ASSEMBLY.
3. FILL VOID OR CAVITY MATERIAL - CAULK FILL MATERIAL BEARING THE UL CLASSIFICATION MARKING INSTALLED TO COMPLETELY FILL ANNULAR SPACE BETWEEN PIPE OR CONDUIT AND GYPSUM WALLBOARD AND WITH A MIN 1/4" DIAM BEAD OF CAULK APPLIED TO PERIMETER OF CONDUIT AT ITS EGRESS FROM THE WALL. CAULK INSTALLED SYMMETRICALLY ON BOTH SIDES OF WALL ASSEMBLY. THE HOURLY F RATING OF THE FIRESTOP SYSTEM IS DEPENDENT UPON THE HOURLY FIRE RATING OF THE WALL ASSEMBLY IN WHICH IT IS INSTALLED, AS SHOWN IN THE FOLLOWING TABLE. THE HOURLY T RATING OF THE FIRESTOP SYSTEM IS DEPENDENT UPON THE TYPE OR SIZE OF THE CONDUIT AND THE HOURLY FIRE RATING OF THE WALL ASSEMBLY IN WHICH IT IS INSTALLED, AS TABULATED BELOW:

MAX CONDUIT DIAM, IN.	ANNULAR SPACE, IN.	F RATING, HR.	T RATING, HR.
1	0 TO 3/16	1 OR 2	0, 1 OR 2
1	1/4 TO 1/2	3 OR 4	3 OR 4
4	0 TO 1-1/2	1 OR 2	0
6	1/4 TO 1/2	3 OR 4	0
12	3/16 TO 3/8	1 OR 2	0

CONDUIT PENETRATION OF FIREWALL
UL SYSTEM NO. W-L-1001 — 4

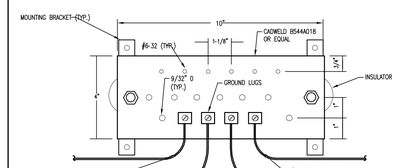

FRONT VIEW

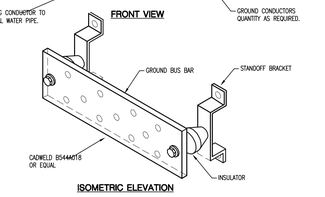

ISOMETRIC ELEVATION

GROUND BAR
No Scale — 1

LIGHTING FIXTURE SCHEDULE

TYPE	DESCRIPTION	MANUFACTURER	MODEL NUMBER	VOLTAGE	REQUIRED LAMPS NUM.	REQUIRED LAMPS TYPE	VA	REMARKS
B2	2X4 RECESSED FLUORESCENT, DIRECT/INDIRECT FIXTURE WITH WHITE PERFORATED, ROUND CENTER BASKET DIFFUSER.	H.E. WILLIAMS	DIG-S24-232-WPR-EB-F348-UNV-LP735	277	2	F32T8	64	
B2E	2X4 RECESSED FLUORESCENT, DIRECT/INDIRECT FIXTURE WITH WHITE PEFORATED, ROUND CENTER BASKET DIFFUSER AND EMERGENCY BATTERY PACK.	H.E. WILLIAMS	DIG-S24-232-WPR-EB-F348-UNV-LP735-EM	277	2	F32T8	64	
C1	6" DIA. COMPACT FLUORESCENT DOWNLIGHT WITH SATIN GLOW REFLECTOR AND WHITE TRIM	H.E. WILLIAMS	PH60-13ZT-SG-MWT-BH-EB1-UNV	277	1	32W PLT	32	
K	4', 2 LAMP FLUORESCENT STRIP, SURFACE MOUNTED	H.E. WILLIAMS	75-4-132-EB1-UNV	277	2	F32T8	64	
W	2' SURFACE MOUNT, LINEAR FLUORESCENT DECORATIVE WALL SCONCE WITH SATIN NICKEL FINISH AND ETCHED WHITE LENS.	FORECAST	F3510-36U	277	2	F17T8	34	COORDINATE MOUNTING HEIGHT WITH ARCHITECT. FINISH TO BE SELECTED BY ARCHITECT
XB	LED EXIT SIGN FIXTURE, UNIVERSAL MOUNT, RED LETTERS WITH BLACK HOUSING AND BRUSHED ALUMINUM FACE - SINGLE OR DOUBLE FACE	BEGHELLI	LC1E-SA-LR-U-B-AL	277	NA	LED	10	COORDINATE MOUNTING HEIGHT WITH ARCHITECT. FINISH TO BE SELECTED BY ARCHITECT.

GENERAL LIGHTING NOTES:

1. ALL FLUORESCENT FIXTURES SHALL USE T8 LAMPS AND ELECTRONIC BALLASTS, UNLESS OTHERWISE NOTED.
2. REFER TO ARCHITECTURAL REFLECTED CEILING PLAN FOR EXACT LOCATION OF LIGHT FIXTURES.
3. COORDINATE TYPE OF CEILING FOR EACH FIXTURE WITH ARCHITECTURAL REFLECTED CEILING PLANS AND PROVIDE FIXTURE TRIM AS REQUIRED.
4. PROVIDE APPROVED FIRE RATED ENCLOSURES FOR ALL LIGHT FIXTURES LOCATED IN FIRE RATED CEILINGS.
5. FIXTURES IN AREAS WITHOUT CEILINGS, OR IN MECHANICAL AND ELECTRICAL ROOMS SHALL BE MOUNTED WITH 1½" X 1½" KINDORF CHANNEL SUPPORT SUSPENDED FROM ROOF STRUCTURE WITH THREAD RODS. FIXTURES SHALL BE MOUNTED 10'-0" A.F.F.
6. IF THERE IS A DISCREPANCY BETWEEN A FIXTURE DESCRIPTION AND GENERAL NOTES, AND THE CATALOG NUMBER LISTED, THE FIXTURE DESCRIPTION AND GENERAL NOTES SHALL DICTATE.

Name: 4MLC

MAIN BREAKER: 150 AMPS — 3 POLE
MAIN LUGS: ____ AMPS
K.A.I.C. : ____ AMPS
SURFACE MTD: X
FLUSH MTD: ____

3 PHASE
4 WIRE
X 208Y/120V
480Y/277V
240/120V

Project Name: Flagler MOB IS Exp
Project Number: 812082
Fed From: 4MHA

NOTE	EXT NO	IDENTIFICATION	CODE	LOAD/PHASE (KVA) A	B	C	CIRCUIT BREAKER TRIP	POLES	POLES	TRIP	LOAD/PHASE (KVA) A	B	C	CODE	IDENTIFICATION	CKT NO	NOTES
	1	RECEPT-TOILET, OFFICE	R	1.0			20	1	3	90	6.7			R	UPS-DATA ROOM	2	1
	3	RECEPT-DATA ROOM	R		0.8		20	1	–	–		6.7			–	4	
	5	RECEPT-DATA ROOM	R			0.8	20	1	–	–			6.7		–	6	
	7	RECEPT-IS DEPT	R	1.0			20	1	2	30	2.0			M	CRU-1/CU-1	8	
	9	EF-1	M		0.7		20	1	–	–		2.0			–	10	
	11	RECEPT-ROOF	R			0.2	20	1	2	30			2.0	M	CRU-2/CU-2	12	
	13	SPARE					20	1	–	–	2.0				–	14	
	15	SPARE					20	1	1	20					SPARE	16	
	17	SPARE					20	1	1	20					SPACE	18	
	19	SPACE					20	1	1	20					SPACE	20	
	21	SPACE					20	1	1	20					SPACE	22	
	23	SPACE					20	1	1	20					SPACE	24	
	25	SPACE					20	1	1	20					SPACE	26	
	27	SPACE					20	1	1	20					SPACE	28	
	29	SPACE					20	1	1	20					SPACE	30	
	31	SPACE					20	1	1	20					SPACE	32	
	33	SPACE					20	1	1	20					SPACE	34	
	35	SPACE					20	1	1	20					SPACE	36	
	37	SPACE					20	1	1	20					SPACE	38	
	39	SPACE					20	1	1	20					SPACE	40	
	41	SPACE					20	1	1	20					SPACE	42	
				2.0	1.5	1.0					10.7	8.7	8.7				

	CONN. LOAD (KVA)	ADJUST. FACTOR	DEMAND FACTOR	DEMAND LOAD (KVA)
LIGHTING (L)	0.0	1.25	1.00	0.0
RECEPTACLES (R)	23.9	---	NEC	17.0
LARGEST MOTOR (M)	4.0	1.25	1.00	5.0
ALL OTHER MOTORS (M)	4.7	1.00	1.00	4.7
HEATING (H)	0.0	1.00	1.00	0.0
COOLING (C)	0.0	1.00	1.00	0.0
OTHER (O)	0.0	1.00	1.00	0.0
ELEVATOR (V)	0.0	1.00	1.00	0.0
SPARES (S)	0.0	1.00	1.00	0.0
DRYERS (D)	0.0	1.00	1.00	0.0
X-RAY (X)	0.0	1.00	1.00	0.0
KITCHEN (K)	0.0	1.00	1.00	0.0

TOTAL CONNECTED LOAD: 32.6 KVA
TOTAL DEMAND LOAD: 26.7 KVA
DEMAND AMPS: 74.1 AMPS

4. 4 #4, 1 #8 GRND – 1 1/4"C.

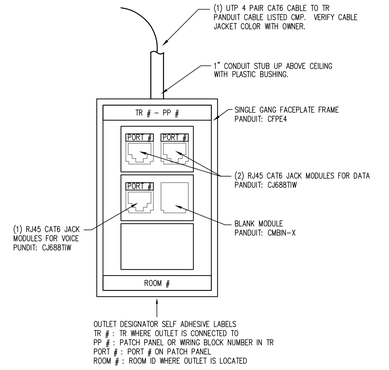

F12

FOR THE OTHER OUTLET TYPES PROVIDE AS FOLLOWS			
OUTLET TYPE	FACE PLATE	# OF RJ45 CAT6 JACKS FOR VOICE	# OF RJ45 CAT6 JACKS FOR DATA
F22	SINGLE	2	2
F20	SINGLE	2	0
F11	SINGLE	1	1
F01	SINGLE	0	1
F10	SINGLE	1	0

WALL MOUNTED OUTLET - VOICE/DATA
No Scale — 5

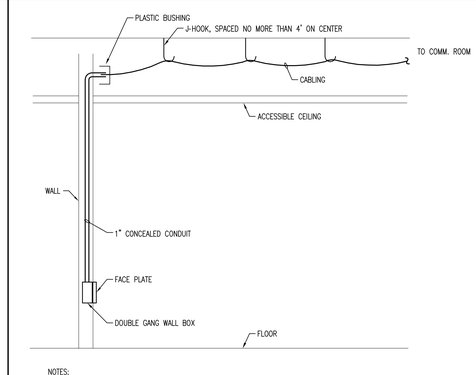

NOTES:

1. COORDINATE COMMUNICATION OUTLET LOCATIONS WITH ARCHITECTURAL ELEVATIONS. MATCH HEIGHT OF CORRESPONDING ELECTRICAL OUTLETS.

FLUSH OUTLET AND CONDUIT
No Scale — 2

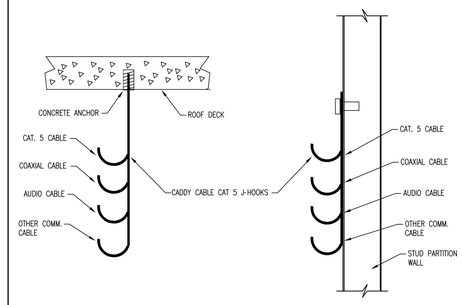

NOTE: TREE SYSTEM IS FOR MAIN CORRIDOR PATHWAYS. DOUBLE AND SINGLE TREES MAYBE USED IN ROOMS.

CABLE HANGER
No Scale — 3

G S & P
Design Services For The Built Environment
Atlanta
Birmingham
Charlotte
Cincinnati
Columbus
Dallas
Fort Lauderdale
Knoxville
Jackson
Jacksonville
Louisville
Memphis
Nashville
Richmond
Tampa
GRESHAM SMITH AND PARTNERS
5220 Belfort Road
Suite 100
Jacksonville, FL 32256
904.332.6699
FIRM'S FLORIDA CERT. NO. AAP000034/EB0003806 IB26000797

FLAGLER HOSPITAL
Excellence As A Way Of Life

IS PHASE II

CONSTRUCTION DOCUMENTS

SEAL:
Gerald J. Versluys, P.E.
Florida License #59177

REVISION

No.	Date	Revision

ELECTICAL DETAILS
RISER DIAGRAMS
AND SCHEDULES

E3.01

PROJECT:27432.00
DATE: AUG 31, 2012

L:\2012-Jobs\812082-Flagler Hsp MOB IS Exp\CAD-MEP\Sheets E3.01.dwg 8/31/2012 12:50:16 PM brian.jones

1650 Prudential Drive
Suite 200
Jacksonville, Florida 32207
Phone: 904-306-9111
Fax: 904-306-9117
ENGINEERING FOR ARCHITECTURE www.tlc-engineers.com
© Copyright 2011 TLC Engineering for Architecture, Inc.
COA 15 TLC NO:812082
DRAWN BY: JDH CHECKED BY: GJV
APPROVED BY: GJV

ELECTRICAL SPECIFICATIONS

GENERAL

CODES, PERMITS AND INSPECTIONS:

THE INSTALLATION SHALL COMPLY WITH ALL LOCAL LAWS AND ORDINANCES APPLICABLE TO ELECTRICAL INSTALLATIONS, AND WITH THE REGULATIONS OF THE NFPA WHERE SUCH REGULATIONS DO NOT CONFLICT WITH THOSE LAWS. OBTAIN ALL PERMITS REQUIRED.

MANUFACTURERS DRAWINGS AND DATA:

SUBMIT TO THE ARCHITECT FOR APPROVAL FIVE (5) COPIES OF THE COMPLETE LIST OF ALL ELECTRICAL MATERIALS WHICH ARE PROPOSED TO BE FURNISHED FOR THIS PROJECT. AS A MINIMUM THE SUBMITTAL SHALL INCLUDE PANELBOARDS, A.I.C. OF BREAKERS INSTALLED, AND LIGHT FIXTURES.

STANDARD OF MATERIALS AND WORKMANSHIP:

ALL MATERIALS, EQUIPMENT AND APPARATUS COVERED BY THIS SPECIFICATION SHALL BE NEW, OF CURRENT MANUFACTURE AND SHALL BEAR THE SEAL OF APPROVAL OF THE UNDERWRITERS LABORATORIES. ALL WORK SHALL BE EXECUTED IN A WORKMANLIKE MANNER AND SHALL PRESENT A NEAT AND MECHANICAL APPEARANCE WHEN COMPLETED.

STORAGE OF MATERIALS:

THE CONTRACTOR SHALL PROVIDE SUITABLE STORAGE FACILITIES FOR ALL MATERIAL FURNISHED BY HIM UNDER THIS CONTRACT. ALL ITEMS TO BE INSTALLED MUST BE FREE OF RUST AND DIRT.

TEMPORARY LIGHT AND POWER:

MATERIAL AND WORK TO BE FURNISHED. FURNISH AND INSTALL ALL EQUIPMENT FOR TEMPORARY LIGHT AND POWER UNLESS NOTED OTHERWISE.

SERVICES NOT INCLUDED UNDER THIS SECTION OF THE SPECIFICATIONS:

ELECTRICAL ENERGY COST CHARGED BY THE UTILITY COMPANY DURING CONSTRUCTION PERIOD.

CIRCUIT BREAKERS INSTALLED IN EXISTING PANELS:

CIRCUIT BREAKERS INSTALLED IN EXISTING PANELS SHALL HAVE AN A.I.C. RATING EQUAL TO THAT OF THE PANEL IN WHICH THEY ARE INSTALLED.

IDENTIFICATION:

EQUIPMENT:

EQUIPMENT IDENTIFICATION SHALL BE MADE USING ENGRAVED LAMINATED PHENOLIC OR MICARTA PLATES (INDENTED TAPE LABELS WILL NOT BE PERMITTED). CHARACTERS SHALL BE WHITE ON A BLACK BACKGROUND AND 1/4" HIGH MINIMUM. PLATES SHALL BE SECURED TO THE PANELS BY MEANS OF SCREWS OR METAL PRESSURE PINS. CEMENT, BY ITSELF, WILL NOT ACCEPTABLE. ALL NAMEPLATES SHALL BE MOUNTED ON THE OUTSIDE SURFACE OF THE PIECE OF EQUIPMENT. INDIVIDUALLY ENCLOSED SAFETY SWITCHES, CIRCUIT BREAKERS, AND MOTOR STARTERS, PULL BOXES, CONTROL CABINETS AND OTHER SUCH ITEMS SHALL BE IDENTIFIED INDICATING LOAD, ELECTRICAL CHARACTERISTICS, AND SOURCE. FOR EXAMPLE, A DISCONNECT SWITCH FOR A 7 1/2 HORSEPOWER, 208 VOLT, 3 PHASE AIR HANDLING UNIT, NUMBER 8 FEED FROM PANEL "MDP", CIRCUIT NUMBER 2 SHALL BE LABELED AS FOLLOWS:

AHU-8
7 1/2 HP, 208V, 3PH
CIR: MDP-2

SERVICE ENTRANCE PANEL AND PANELBOARDS SHALL BE IDENTIFIED INDICATING PANEL DESIGNATION FROM THE DRAWINGS, ELECTRICAL CHARACTERISTICS AND SOURCE. FOR EXAMPLE, A 120/240 VOLT 3 PHASE PANEL "LPA" FED FROM "MDP" CIRCUIT NO. 3 SHALL BE LABELED AS FOLLOWS:

LPA
120/208V, 33
(FEEDER: MDP-3)

SERVICE ENTRANCE PANEL SHALL ALSO HAVE EACH CIRCUIT IDENTIFIED AS TO CIRCUIT NUMBER, LOAD, AND ELECTRICAL CHARACTERISTICS OF LOAD. FOR EXAMPLE, A 5 HP, 208 VOLT, 3 PHASE HOT WATER PUMP NUMBER 6 FEED FROM PANEL MDP, CIRCUIT NO. 4 WOULD BE LABELED AS FOLLOWS WITH THE PLATE ATTACHED ADJACENT TO THE CIRCUIT:

MDP-4
HWP-6
5HP, 208V, 3

JUNCTION BOX IDENTIFICATION: EACH JUNCTION BOX COVER SHALL BE LABELED WITH A PERMANENT "MAGIC" MARKER OR OTHER MEANS TO IDENTIFY THE CIRCUITS WITHIN. FOR EXAMPLE, A JUNCTION BOX CONTAINING LIGHTING CIRCUITS 21, 23, 25 FROM PANEL L2A WOULD BE LABELED "L2A-21,23,25". TELEPHONE JUNCTION BOXES SHALL BE LABELED "T". FIRE ALARM AND OTHER SYSTEM JUNCTION BOXES SHALL BE LABELED ACCORDINGLY.

RACEWAY IDENTIFICATION:

ALL RACEWAYS LEAVING THE SERVICE ENTRANCE PANEL AND DISTRIBUTION PANELS SHALL BE CLEARLY MARKED AS TO THEIR CIRCUIT NUMBER. FOR EXAMPLE, A CONDUIT CONTAINING CONDUCTORS FOR PANEL MDP, CIRCUIT NO. 5 WOULD BE MARKED MDP-5. EMPTY CONDUITS SHALL BE MARKED "EMPTY".

FIREPROOFING:

ALL CONDUIT AND BOXES PASSING THROUGH OR INSTALLED WITHIN FIRE WALLS AND SMOKE WALLS SHALL BE INSTALLED SO AS TO MAINTAIN THE INTEGRITY OF THE WALL THROUGH WHICH IT PASSES. BOXES TO BE INSTALLED WITH 1/8" OF WALL SURFACE.

TESTING:

AT THE COMPLETION OF THE WORK, A THOROUGH TEST SHALL BE MADE IN THE PRESENCE OF THE ARCHITECT OR HIS REPRESENTATIVE, AND THE ENTIRE SYSTEM SHALL BE SHOWN TO BE IN PERFECT WORKING CONDITION AS INTENDED BY THESE SPECIFICATIONS.

GUARANTEE:

THE CONTRACTOR SHALL LEAVE THE ENTIRE ELECTRICAL SYSTEM INSTALLED BY HIM UNDER THIS CONTRACT IN PROPER WORKING ORDER AND SHALL REPLACE, WITHOUT ADDITIONAL CHARGE, ALL WORK OR MATERIAL WHICH MAY DEVELOP DEFECTS, ORDINARY WEAR AND TEAR OR DAMAGE RESULTING FROM IMPROPER HANDLING EXCEPTED, WITHIN A PERIOD OF ONE YEAR FROM THE DATE OF FINAL TESTING AND ACCEPTANCE BY THE ARCHITECT. BALLASTS SHALL BE INCLUDED BUT LAMPS SHALL BE EXCLUDED.

CONDUIT AND FITTINGS:

FITTINGS FOR ELECTRICAL METALLIC TUBING SHALL BE STEEL SET SCREW OR COMPRESSION TYPE. DIE CAST FITTINGS OR CONNECTORS WILL NOT BE ACCEPTABLE. EMT CONNECTORS TO BE SIMILAR TO TA69 "INSULINE" WITH COMPLETELY INSULATED THROATS. (FIELD APPLIED INSULATED THROATS ARE NOT ACCEPTABLE).

CONDUITS BUSHINGS SHALL BE METALLIC WITH INSULATED THROATS. INSULATING GROUNDING TYPE BUSHINGS SHALL BE PROVIDED WHERE REQUIRED UNDER 'GROUNDING'.

RACEWAY INSTALLATION:

IN GENERAL, THE CONDUIT INSTALLATION SHALL FOLLOW THE LAYOUT SHOWN ON THE PLANS. THIS LAYOUT IS, HOWEVER, DIAGRAMMATIC ONLY, AND WHERE CHANGES ARE NECESSARY DUE TO STRUCTURAL CONDITIONS, OTHER APPARATUS OR OTHER CAUSES, SUCH CHANGES SHALL BE MADE WITHOUT ADDITIONAL COST TO THE OWNER. IT IS RECOGNIZED THAT BRANCH CIRCUIT ROUTING SHOWN ON THE DRAWINGS MAY NOT ALWAYS BE THE MOST ECONOMICAL OR THE MOST FEASIBLE METHOD. ROUTING MAY BE CHANGED BY THE CONTRACTOR SUBJECT TO THE FOLLOWING PROVISIONS:

CONDUITS SHOWN ROUTED OVERHEAD MAY NOT BE INSTALLED IN OR BELOW SLABS OR IN WALLS.

NOT MORE THAN THREE CIRCUITS MAY BE INSTALLED IN ANY ONE CONDUIT UNLESS OTHERWISE INDICATED. CARE MUST BE TAKEN TO PROVIDE THE APPROPRIATE NUMBER OF NEUTRALS WHERE TWO OR THREE CIRCUITS ARE ON THE SAME PHASE.

ALL CONDUITS SHALL BE CONCEALED UNLESS OTHERWISE NOTED ON THE DRAWINGS.
EXPOSED CONDUIT WILL BE PERMITTED ONLY AS SHOWN ON THE DRAWINGS.
EXPOSED CONDUIT SHALL BE RUN PARALLEL WITH OR AT RIGHT ANGLES TO THE BUILDING WALLS.
ALL EMPTY CONDUITS SHALL BE PROVIDED WITH A PLASTIC OR NYLON FISH WIRE.

CONDUIT STUB-UPS AT PANELS, ETC. SHALL BE SECURED IN PLACE BY USE OF UNISTRUT AND CLAMPS.
CONDUIT AND TUBING SHALL BE KEPT AT LEAST TWELVE (12) INCHES FROM PARALLEL RUNS OF FLUES, STEAM PIPS OR HOT WATER LINES.

EXPOSED CONNECTIONS TO MOTORS AND EQUIPMENT FROM OVERHEAD CONDUITS SHALL CONSIST OF VERTICAL CONDUIT (MINIMUM SIZE 1") FROM TYPE "LL" OR "LB" UNILET TO FLOOR FLANGE. CONNECTION TO EQUIPMENT SHALL BE WITH FLEXIBLE LIQUID-TIGHT FROM TYPE FDT BOXES LOCATED IN THE VERTICAL CONDUIT.

FLEXIBLE CONDUIT IN ALL AREAS SUBJECT TO MOISTURE SHALL BE LIQUID-TIGHT FLEXIBLE CONDUIT.
ALL ELECTRICAL CONNECTIONS TO VIBRATION ISOLATED EQUIPMENT SHALL BE MADE WITH FLEXIBLE CONDUIT.
ALL CONDUITS ENTERING THE BUILDING SHALL BE SUITABLY SEALED TO PREVENT THE ENTRANCE OF MOISTURE.
ANY WIRING IN A FINISHED AREA WHICH CANNOT BE CONCEALED IN CONDUIT SHALL BE INSTALLED IN A SURFACE METAL RACEWAY SYSTEM AS MANUFACTURED BY WIREMOLD OR EQUAL. UTILIZATION OF SURFACE METAL RACEWAY, IF NOT INDICATED AS SUCH ON THE PLANS, WILL BE ACCOMPLISHED ONLY WITH THE WRITTEN APPROVAL OF THE ARCHITECT.

WHERE FLEX CONDUIT IS USED FROM JUNCTION BOX TO LIGHT FIXTURE IT SHALL BE SUPPORTED SUCH THAT IT DOES NOT TOUCH CEILING TILES OR INTERFERE WITH THEIR PLACEMENT.
FLEXIBLE CONNECTIONS TO LIGHT FIXTURES SHALL BE AT LEAST 4 FEET BUT NOT MORE THAN 6 FEET IN LENGTH PER N.E.C. 410-67(c)
RACEWAYS CONCEALED IN GROUND OUTSIDE BUILDING SHALL BE A MINIMUM OF 2 FEET BELOW GRADE.

CONDUCTORS:

ALL CONDUCTORS SHALL BE COPPER OF NOT LESS THAN NINETY-EIGHT PERCENT (98%) CONDUCTIVITY, WITH NEC TYPE THHN/THWN, 600 VOLT INSULATION. CONDUCTORS NO. 12 THROUGH NO. 10 MAY BE SOLID OR STRANDED AND NO. 8 AND LARGER SHALL BE STRANDED. NO CONDUCTORS SMALLER THAN NO. 12 SHALL BE USED EXCEPT AS OTHERWISE NOTED.
CONTROL CONDUCTORS SHALL BE NO. 14.

WIRING:

NEUTRAL WIRES SHALL BE PIGTAILED TO RECEPTACLES SO THAT RECEPTACLE CAN BE REMOVED FOR REPLACEMENT WITHOUT THE NEUTRAL CONNECTION TO OTHER RECEPTACLES ON THE CIRCUIT BEING DISCONNECTED.
WHEN STRANDED WIRE IS USED FOR RECEPTACLE AND LIGHTING CIRCUIT, CONNECTIONS TO THE DEVICES SHALL BE MADE USING VINYL INSULATED "STAKON" CONNECTOR TERMINALS.

CABLE AND WIRE SPLICES:

GENERAL:

THE MATERIALS SHALL BE COMPATIBLE WITH THE CONDUCTORS, INSULATIONS AND PROTECTIVE JACKETS OF THE RESPECTIVE CABLES AND WIRES.

ALUMINUM AND ALUMINUM ALLOY FITTINGS WILL NOT BE ACCEPTED.

FOR CONDUCTOR SIZED NO. 6 AWG OR LARGER: SPLICES IN CONDUCTORS SHALL BE MADE WITH INDENTER, CRIMP CONNECTORS AND COMPRESSION TOOLS OR WITH BOLTED CLAMP TYPE CONNECTORS TO INSURE A SATISFACTORY MECHANICAL AND ELECTRICAL JOINT.

JUNCTION BOXES:

ALL JUNCTION BOXES AND PULL BOXES SHALL BE SIZED PER N.E.C. REQUIREMENTS AND BE OF THE PROPER NEMA CLASSIFICATION FOR THE LOCATIONS WHERE THEY ARE INSTALLED. WHERE BOXES OCCUR ABOVE OTHER THAN LIFT-OUT CEILINGS, ACCESS PANELS MUST BE PROVIDED.

OUTLET BOXES:

SWITCH AND RECEPTACLE OUTLET BOXES SHALL BE FOUR INCH (4") SQUARE OR FOUR AND ELEVEN SIXTEENTHS INCH (4-11/16") A MINIMUM OF 1-1/2" DEEP WITH SWITCH RING AS REQUIRE OR GANG BOXES A MINIMUM OF 2" DEEP WHEN MORE THAN TWO DEVICES MOUNT UNDER A COMMON COVER.

WALL TELEPHONE OUTLETS SHALL BE FOUR INCH (4") SQUARE BOXES WITH STANDARD SWITCH COVERS AND TELEPHONE COVER PLATES.

LOCATION OF OUTLETS:

THE APPROXIMATE LOCATIONS OF OUTLETS, ETC. ARE SHOWN ON THE DRAWINGS. THE EXACT LOCATIONS SHALL BE DETERMINED AT THE BUILDING. IT IS THE RESPONSIBILITY OF THE CONTRACTOR TO NOTE THE LOCATIONS AND HEIGHTS OF CABINETS, ETC. BEFORE THE INSTALLATION OF OUTLETS.

WALL SWITCHES:

ALL SWITCHES SHALL BE FLUSH ENCLOSED TYPE, SPECIFICATION GRADE, RATED AT 20 AMPERES, 120/277 VOLTS, ALTERNATING CURRENT ONLY, QUIET OPERATION, AND SHALL COMPLY WITH FEDERAL SPECIFICATION W-S-896F (SUBMIT PROOF OF COMPLIANCE). COLOR OF ALL DEVICES SHALL BE IVORY.

MOTOR SWITCHES WITH INHERENT THERMAL OVERLOAD PROTECTION SHALL BE SQUARE D, TYPE F FOR FLUSH OR SURFACE MOUNTING AS REQUIRED BY THE LOCATION OF THE UNIT. UNITS SHALL BE FURNISHED WITH PILOT LIGHTS AS INDICATED.

RECEPTACLES:

RECEPTACLES SHALL BE FURNISHED AND INSTALLED WHERE SHOWN ON THE DRAWINGS AND SHALL CONFORM TO THE FOLLOWING REQUIREMENTS:

GROUNDING TYPE DUPLEX RECEPTACLE, RATED 20 AMPERES, 125 VOLTS, 2 WIRE, 3 POLE WITH GROUNDED SHUNT (YOKE PERMANENTLY GROUNDED TO THIRD CUP), NEMA CONFIGURATION NO. 5-20R, AND CONFORMING TO FEDERAL SPECIFICATIONS W-C-596F (SUBMIT PROOF OF COMPLIANCE).

OTHER RECEPTACLES LISTED ON THE DRAWINGS SHALL BE SPECIFICATION GRADE RECEPTACLES.
ALL RECEPTACLES SHALL BE IVORY IN COLOR.

DEVICES PLATES:

ALL PLATES FOR SWITCH, RECEPTACLES AND TELEPHONE OUTLETS LOCATED IN FINISHED WALLS SHALL BE SMOOTH THERMOPLASTIC. COLOR TO MATCH DEVICE. ALL PLATES FOR OUTLETS LOCATED ON UNFINISHED WALL OR ON CONDULET TYPE FITTINGS SHALL BE ZINC COATED SHEET METAL WITH ROUNDED OR BEVELED EDGES.

GROUNDING:

GENERAL:

NON-METALLIC CONDUITS OR DUCTS SHALL CONTAIN GROUNDING CONDUCTOR UNLESS OTHERWISE SPECIFIED.

INSULATED GROUNDING BUSHINGS SHALL BE REQUIRED FOR ALL RACEWAYS ENTERING SERVICE ENTRANCE PANELS, DISTRIBUTION PANELS, ALL RACEWAYS WITH #4 OR LARGER CONDUCTORS AND ANY RACEWAY ENTERING A CONCENTRIC KNOCK-OUT.

EQUIPMENT GROUNDING:

GENERAL:

IN GENERAL A GROUND WIRE SHALL BE INSTALLED IN EVERY CONDUIT. THE CONDUIT INSTALLATION ITSELF SHALL SERVE AS AN ADDITIONAL GROUNDING MEANS.

WHERE CONDUITS TERMINATE WITHOUT MECHANICAL CONNECTION (I.E. LOCKNUTS AND BUSHINGS) TO PANELBOARDS, AND FOR ALL TERMINATIONS OF CONDUIT WITH #4 OR LARGER; AND FOR ALL SIZES OF METALLIC CONDUIT (RIGID OR FLEXIBLE) TERMINATING IN CONCENTRIC KNOCKOUTS, THE FOLLOWING

PROCEDURE SHALL BE FOLLOWED: EACH CONDUIT SHALL BE PROVIDED WITH AN INSULATING GROUND BUSHING AND EACH BUSHING CONNECTED WITH A BARE COPPER CONDUCTOR TO THE GROUND BUS IN THE ELECTRICAL EQUIPMENT. THE GROUND CONDUCTOR SHALL BE IN ACCORDANCE WITH THE ARTICLE OF GROUNDING OF NEC.

RACEWAY INSTALLATION CONDITIONS:

CONDUIT RACEWAYS SHALL BE INSTALLED AS INDICATED HEREIN. WHERE MORE THAN ONE TYPE OF RACEWAY IS LISTED UNDER ONE CONDITION, THE CONTRACTOR MAY EXERCISE HIS OPTION OF THE RACEWAY USED. CONDITIONS OF RACEWAY INSTALLATION ARE AS FOLLOWS:

EXPOSED RACEWAY BELOW 8'-0" FROM FINISH FLOOR AND IN AREAS SUBJECT TO MOISTURE: RIGID GALVANIZED STEEL CONDUIT.

RACEWAY CONCEALED OVERHEAD, OR IN WALLS: RIGID GALVANIZED STEEL CONDUIT OR ELECTRICAL METALLIC TUBING (EMT).

RACEWAY CONCEALED IN GROUND OUTSIDE BUILDING: SCHEDULE 40 PVC. RIGID STEEL CONDUITS INSTALLED BELOW SLAB-ON-GRADE OR IN THE EARTH SHALL HAVE A FACTORY-APPLIED PVC COATING, TWO COATS OF A COAL-TAR SYSTEM, OR SHALL BE FIELD-WRAPPED WITH 0.010 INCH THICK PIPE-WRAPPING PLASTIC TAPE APPLIED WITH A 50-PERCENT OVERLAY.

FINAL RACEWAY CONNECTION TO RECESSED FIXTURE IN ACCESSIBLE LOCATIONS: FLEXIBLE STEEL CONDUIT MAXIMUM OF 6'-0" LONG.

FINAL RACEWAY CONNECTION TO PUMPS, MOTORS, TRANSFORMERS, ETC.: LIQUID-TIGHT FLEXIBLE STEEL CONDUIT MAXIMUM OF 4'-0" LONG.

RACEWAY THAT EXTEND THROUGH THE SLAB OF ABOVE FINISH GRADE: 90° ELBOWS, NIPPLES AND COUPLINGS OF RIGID GALVANIZED STEEL OR IMC SHALL BE USED WHERE ANY RACEWAY EXTENDS THROUGH THE SLAB OR ABOVE FINISHED GRADE. IN GENERAL PVC CONDUIT SHALL NOT BE ALLOWED ABOVE FINISHED SLAB INSIDE THE BUILDING OR WITH 1-1/2" OF FINISHED GRADE OUTSIDE THE BUILDING.

LIGHTING AND APPLIANCE PANELS:

INTERRUPTING RATINGS SHALL BE COORDINATED WITH THE AVAILABLE SHORT CIRCUIT CURRENT. BRANCH CIRCUIT PROTECTION DEVICES SHALL BE MOLDED CASE CIRCUIT BREAKERS BOLT-ON TYPE.

HARDWARE SHALL CONSIST OF COMBINATION LATCH AND LOCK, ALL KEYED THE SAME.

PANEL ENCLOSURES SHALL BE FURNISHED WITHOUT KNOCKOUTS. ALL KNOCKOUTS TO BE FIELD CUT.

TYPED DIRECTORY CARDS SHALL BE FURNISHED IN EACH PANEL.

ALL PANELS SHALL BE PROVIDED WITH AN EQUIPMENT GROUNDING BUS SIMILAR TO, BUT ISOLATED FROM THE SOLID-NEUTRAL BUS.

PANELS SHALL BE CAREFULLY ALIGNED AND RIGIDLY SECURED IN PLACE WITH THE TOP OF THE CABINETS LOCATED 78 INCHES ABOVE THE FINISHED FLOOR.
FLUSH MOUNTED PANEL SHALL HAVE EIGHT (8) 1" EMPTY CONDUITS RUN FROM THE PANEL TO AN ACCESSIBLE LOCATION ABOVE THE CEILING. THE EMPTY CONDUITS SHALL BE CAPPED AND MARKED TO INDICATE THEIR ORIGIN.

EACH PANEL SHALL BE FURNISHED WITH AN IDENTIFICATION PLATE AS SPECIFIED IN THE "EQUIPMENT IDENTIFICATION" SECTION OF THIS SPECIFICATION.

LIGHTING FIXTURES:

IT IS THE CONTRACTOR'S RESPONSIBILITY TO VERIFY CATALOG NUMBERS IN THE FIXTURE SCHEDULE TO ENSURE THAT MATCHES THE DESCRIPTION GIVEN AND FOR PROPER CEILING MOUNTING, REQUIRED ACCESSORIES, ETC.

ALL OUTSIDE FIXTURES SHALL BE SEALED TO PREVENT THE ENTRY OF INSECTS INTO THE LIGHT FIXTURES OR CONDUIT SYSTEM.

FIRE ALARM SYSTEM:

DESCRIPTION:

FURNISH, INSTALL, AND PLACE INTO OPERATING CONDITION AN EXTENSION TO THE EXISTING FIRE ALARM SYSTEM AS DESCRIBED HEREIN AND AS SHOWN ON THE PLANS. THE FIRE ALARM SYSTEM SHALL BE LISTED BY UNDERWRITERS' LABORATORIES INC., BE ADA COMPLIANT, BE CONSTRUCTED AND INSTALLED IN STRICT ACCORDANCE WITH THE NATIONAL FIRE PROTECTION ASSOCIATION 70 AND 72 AND COMPLY WITH THE APPLICABLE REQUIREMENTS OF STATE AND LOCAL CODES AND THE NATIONAL ELECTRICAL CODE.

THE SYSTEM SHALL USE CLOSED LOOP INITIATING DEVICE CIRCUITS WITH INDIVIDUAL ZONE SUPERVISION.

IT SHALL BE THE RESPONSIBILITY OF THE CONTRACTOR TO COORDINATE RELATED WORK WITH ALL TRADES INVOLVED. THE EQUIPMENT SHALL BE AS MANUFACTURED BY SIMPLEX OR APPROVED EQUAL.

SHOP DRAWINGS:

SHOP DRAWINGS SHALL BE COMPLETE WITH DETAIL INFORMATION ON ALL SYSTEM COMPONENTS AS WELL AS SYSTEM WIRING DIAGRAMS.

PRODUCTS:

MANUFACTURERS:
SIMPLEX

DUCT SMOKE DETECTORS:

PHOTOELECTRIC TYPE, UL LISTED. PROVIDE WITH REMOTE STATUS INDICATORS.

ALARM SIGNALS:

ALARM SIGNALS SHALL BE CHIMES AND STROBES AS SHOWN ON THE PLAN. STROBES SHALL MEET THE MINIMUM CANDELA RATING REQUIRED BY ADA. CHIMES SHALL BE ELECTRONIC TYPE, RECESSED AND HAVE A MINIMUM OUTPUT OF 83 Db AT 10 FEET.

WIRING:

WIRING SHALL BE STRANDED #14 AWG, COLOR CODED, AND NUMBERED. INSULATION SHALL BE TYPE THHN OR XHHW.

INSTALLATION:

ALL FIRE ALARM WIRING SHALL BE INSTALLED IN METAL RACEWAYS. JUNCTION BOXES SHALL BE SIZED IN ACCORDANCE WITH THE NUMBER OF WIRES AND TERMINATIONS TO BE INSTALLED. JUNCTION BOXES HAVING MORE THAN TWELVE TERMINATIONS SHALL HAVE TERMINAL STRIPS.

ALL CONNECTIONS SHALL BE MADE BY OR UNDER THE DIRECT SUPERVISION OF A QUALIFIED SYSTEM TRAINED TECHNICIAN.

CERTIFICATION:

UPON COMPLETION OF INSTALLATION, THE ENTIRE SYSTEM SHALL BE TESTED BY THE MANUFACTURER'S TECHNICIAN IN THE PRESENCE OF REPRESENTATIVES OF THE OWNER, THE ARCHITECT, AND THE LOCAL AUTHORITY HAVING JURISDICTION. A CERTIFICATION SHALL BE FORWARDED TO THE ARCHITECT AND ENGINEER BY THE TECHNICIAN STATING THAT HE HAS PERSONALLY VERIFIED THE FOLLOWING:

THE SYSTEM BEING IN ACCORDANCE WITH THE SPECIFICATIONS;
THE SYSTEM BEING IN CORRECT OPERATING CONDITION.

THE ARCHITECT SHALL BE NOTIFIED OF THE DATES AND TIMES PROPOSED FOR THE SYSTEM TESTING. TESTS SHALL NOT BE PERFORMED WITHOUT THE ARCHITECT'S APPROVAL.

ALL EQUIPMENT AND LABOR SHALL BE GUARANTEED FOR A PERIOD OF ONE YEAR FROM ACCEPTANCE.

GS&P
Design Services For The Built Environment
Atlanta
Birmingham
Charlotte
Cincinnati
Columbus
Dallas
Fort Lauderdale
Knoxville
Jackson
Jacksonville
Louisville
Memphis
Nashville
Richmond
Tampa

GRESHAM SMITH AND PARTNERS
5220 Belfort Road
Suite 100
Jacksonville, FL 32256
904.332.6699
FIRM'S FLORIDA CERT. NO.
AAP000034/EB0003806
IB26000797

FLAGLER HOSPITAL
Excellence As A Way Of Life

IS PHASE II

CONSTRUCTION DOCUMENTS

SEAL:
Gerald J. Versluys, P.E.
Florida License #59177

REVISION

No. -	Date -	Revision

ELECTRICAL SPECIFICATIONS

E4.01

PROJECT:27432.00
DATE: AUG 31, 2012

L:\2012-Jobs\812082-Flagler Hsp MOB IS Exp\CAD-MEP\Sheets E4.01.dwg 8/31/2012 12:49:31 PM brian.jones

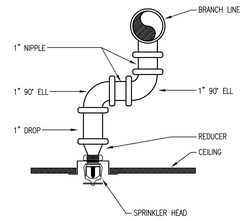

SWING JOINT — 1
No Scale

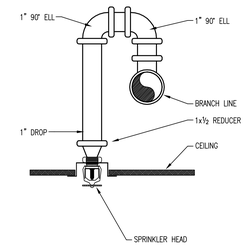

RETURN BEND
No Scale

FIRE PROTECTION SPECIFICATIONS

1.00 - GENERAL PROVISIONS

1.1 PROVIDE ALL LABOR, MATERIAL AND EQUIPMENT FOR A COMPLETE AND PROPERLY OPERATING FIRE PROTECTION SYSTEM.

1.2 CODES AND STANDARDS: THE FIRE SPRINKLER PROTECTION SYSTEMS INSTALLATION, FLUSHING AND TESTING SHALL COMPLY WITH THE REQUIREMENTS OF NFPA 13, AND 24 AND ALL LOCAL CODES HAVING JURISDICTION.

1.3 PIPE THREAD PATTERN: ALL THREADS SHALL BE IN ACCORDANCE WITH LOCAL FIRE DEPARTMENT SPECIFICATIONS AND NFPA 1963, 1998 REVISION.

1.4 UL/FM APPROVAL: ALL EQUIPMENT, VALVES, COUPLINGS, HANGERS AND DEVICES SHALL BE APPROVED BY UNDERWRITERS' LABORATORY (UL) OR FACTORY MUTUAL (FM) FOR USE IN FIRE PROTECTION SERVICE.

1.5 LICENSURE: THE FIRE PROTECTION SYSTEMS SHALL BE INSTALLED BY A STATE OF FLORIDA CERTIFIED FIRE PROTECTION CONTRACTOR.

1.6 ALL FIRE PROTECTION WORK SHALL BE DONE IN A NEAT AND WORKMAN-LIKE MANNER.

1.7 CONTRACTOR SHALL SECURE AND PAY FOR ALL PERMITS AND FEES, ETC., REQUIRED FOR THE EXECUTION OF THIS WORK.

1.8 CONTRACTOR SHALL COORDINATE WORK WITH OTHER TRADES BEFORE FABRICATION OR INSTALLATION. OFFSETS AND/OR TRANSITIONS REQUIRED SHALL BE PROVIDED WITHOUT ADDITIONAL COST. CONTRACTOR SHALL COORDINATE AND INSTALL WORK IN A TIMELY MANNER TO PREVENT DELAYS IN THE CONSTRUCTION.

1.9 CONTRACTOR SHALL BE RESPONSIBLE TO REPAIR OR REPLACE DAMAGED EQUIPMENT AND/OR MATERIAL.

1.10 PIPING SHOP DRAWINGS: SUBMIT 1/8" SCALE PIPING SHOP DRAWINGS. SHOP DRAWINGS SHALL INCLUDE SPRINKLER PIPING CUT LENGTHS, OFFSETS, FITTINGS AND DEVICES, ELEVATIONS, HANGER LOCATIONS, SPRINKLER HEAD COUNT BY TYPE, ELEVATION SECTIONS AND OTHER INSTALLATION INFORMATION. SUBMIT HYDRAULIC CALCULATIONS PROVING THE VIABILITY OF THE MOST HYDRAULICALLY-REMOTE AREAS OF THE PROJECT. INDICATE HYDRAULIC REFERENCE POINTS AND SUBMIT COMPUTER ANALYZED NODAL CALCULATIONS IN BOTH TABULAR AND GRAPHICAL FORMATS. HYDRAULIC IMBALANCE SHALL NOT EXCEED 0.01 GPM AT ANY NODE, AND WATER VELOCITY SHALL NOT EXCEED 20 FEET PER SECOND. DEMONSTRATE COMPLIANCE WITH THE REQUIREMENTS OF NFPA-13 REGARDING DENSITY, AREA OF APPLICATION, SELECTION OF HYDRAULICALLY-REMOTE AREAS, AND MAXIMUM COVERAGE PER SPRINKLER.

1.11 COORDINATE ALL PIPE ROUTING WITH ALL OTHER TRADES PRIOR TO INSTALLATION. ROUTE ALL PIPING TO AVOID DUCTWORK, PIPING, AND BUILDING STRUCTURE.

2.00 - BASIC MATERIALS AND METHODS

2.1 GENERAL: ONLY THE FOLLOWING MATERIALS DESIGNED FOR 175 PSIG CWP SHALL BE USED FOR FIRE PROTECTION PIPING UNLESS SPECIFICALLY INDICATED OTHERWISE. ALL PIPING MATERIALS SHALL HAVE A CORROSION RESISTANCE RATING (CCR) OF 1.0 OR GREATER.

2.2 PIPE: 2 INCH OR SMALLER PIPE, AND ALL THREADED PIPING SHALL BE BLACK STEEL, SCHEDULE 40, ASTM A-53. 2-1/2 INCH AND LARGER PIPE MAY BE BLACK STEEL, SCHEDULE 10, ASTM A-135.

2.3 FITTINGS: SCHEDULE 40 BLACK STEEL PIPE SHALL BE JOINED BY MECHANICAL COUPLINGS, THREADED OR WELDED FITTINGS; SCHEDULE 10 BLACK STEEL PIPE SHALL BE JOINED BY ROLLED GROOVE COUPLINGS OR WELDED FITTINGS ONLY. WELDED BRANCH CONNECTIONS WHICH ARE AT LEAST 2 NOMINAL PIPE SIZES SMALLER THAN THE MAINS ARE PERMITTED. THREADED FITTINGS ARE ACCEPTABLE ONLY FOR PIPING 2 INCHES AND SMALLER.

2.4 HANGERS: ALL HANGER SPACING SHALL COMPLY WITH THE REQUIREMENTS OF NFPA-13.

2.5 SPRINKLER HEAD LOCATION: INSTALL SPRINKLER HEADS IN THE CENTER OF THE CEILING TILES FOR SUSPENDED CEILING APPLICATIONS.

2.6 SPRINKLER CAGE GUARD: PROVIDE HEAD GUARDS ON ALL HEADS IN ELECTRICAL ROOMS AND ON ALL HEADS LESS THAN 7'-0" ABOVE FINISHED FLOOR.

2.7 ACCESS PANELS: PROVIDE ACCESS PANELS TO ALL VALVES WITHIN CHASES OR ABOVE NON-ACCESSIBLE CEILINGS. REFER TO ARCHITECTURAL DRAWINGS FOR CEILING TYPES.

2.8 HYDROSTATIC TESTS: ABOVE GROUND AND BELOW GROUND PIPING SYSTEMS SHALL BE HYDROSTATICALLY TESTED AT NOT LESS THAN 200 PSI PRESSURE, OR AT 50 PSI IN EXCESS OF THE MAXIMUM PRESSURE, WHICHEVER IS GREATER, FOR A PERIOD OF 2 HOURS. THE TEST PRESSURE SHALL BE READ FROM A GAUGE LOCATED AT THE LOW ELEVATION POINT OF THE INDIVIDUAL SYSTEM OR PORTION OF THE SYSTEM BEING TESTED. THE SPRINKLER PIPING SHALL NOT HAVE LEAKAGE EXCEEDING THE AMOUNTS SPECIFIED IN NFPA 24. LEAKAGE QUANTITIES SHALL BE DETERMINED BY PUMPING AT THE SPECIFIED TEST PRESSURE FROM A CALIBRATED CONTAINER. REPAIR LEAKING JOINTS AND RETEST AS NECESSARY UNTIL ALL SYSTEMS HAVE BEEN TESTED. TEST THE PIPING BETWEEN THE CHECK VALVE IN THE FIRE DEPARTMENT INLET PIPE AND THE OUTSIDE CONNECTION THE SAME AS THE BALANCE OF THE SYSTEM.

3.00 - FIRE PROTECTION VALVES AND ACCESSORIES

3.1 QUICK-RESPONSE UPRIGHT SPRINKLERS: SPRINKLER HEADS SHALL BE MANUFACTURED WITH UPRIGHT DEFLECTORS FOR INSTALLATION ABOVE THE BRANCH LINE WITH BRASS FINISH - CENTRAL GB-QR OR VIKING MICROFAST MODEL M.

3.2 QUICK RESPONSE SEMI-RECESSED SPRINKLERS: SPRINKLER HEADS SHALL BE MANUFACTURED WITH PENDANT DEFLECTOR FOR INSTALLATION BELOW THE BRANCH LINE WITH CHROME-PLATED FINISH - CENTRAL GB-QR OR VIKING MICROFAST MODEL M WITH MODEL F-1 ESCUTCHEON.

3.3 SPRINKLER CAGE GUARD: PROVIDE SPRINKLER HEAD OPEN-WIRE CAGE GUARD TO PROTECT HEADS FROM INJURY. CAGE WIRE SHALL BE CADMIUM-PLATED STEEL - CENTRAL SPRINKLER GUARD A-1 OR VIKING MODEL A-1 SPRINKLER GUARD.

FIRE PROTECTION GENERAL NOTES

1. FIRE PROTECTION SYSTEM TO COMPLY WITH NFPA 13, 14, 20, 24 AND ALL APPLICABLE STATE CODES.
2. FINAL INSPECTION AND APPROVAL BY LOCAL FIRE MARSHAL AND ARCHITECT/ENGINEER.
3. SPRINKLER SHOP DRAWINGS AND MATERIAL SUBMITTALS SHALL BE SUBMITTED TO THE ARCHITECT/ENGINEER AND STATE FIRE MARSHAL AND SHALL BE APPROVED PRIOR TO ANY INSTALLATION.
4. PIPE ROUTING SHOWN IS SCHEMATIC ONLY. IT IS THE RESPONSIBILITY OF THIS CONTRACTOR TO PROVIDE ANY ADDITIONAL OFFSETS REQUIRED FOR PROPER INSTALLATION AND COORDINATION WITH OTHER TRADES.
5. PIPING IN AREAS WITH EXPOSED STRUCTURE SHALL BE INSTALLED AS HIGH AS POSSIBLE TO ALLOW THE OWNER MAXIMUM USE OF THE SPACE.
6. REFER TO ARCHITECTURAL REFLECTED CEILING PLANS FOR CEILING DESCRIPTIONS AND HEIGHTS.
7. SPRINKLERS ARE TO BE COORDINATED WITH ALL DIFFUSERS, SPEAKERS, LIGHTING FIXTURES AND CEILING SYSTEMS. SPACING OF SPRINKLERS SHALL BE IN ACCORDANCE WITH NFPA 13 AND THE LISTING OF THE SPRINKLER.
8. SPRINKLER LOCATIONS SHALL BE CENTERED IN THE TILE. PROVIDE ARMOVER OR SWING JOINT AS REQUIRED.
9. SPRINKLERS IN AREAS WITH EXPOSED STRUCTURE (OBSTRUCTED CONSTRUCTION) SHALL BE INSTALLED WITH DEFLECTOR 1" BELOW THE BOTTOM OF THE BEAM (MAXIMUM 22" BELOW ROOF DECK). EXPOSED BAR JOISTS THAT HAVE SPRAY-ON FIRE PROOFING THAT MAKES THE JOIST SOLID SHALL BE TREATED LIKE A BEAM WITH THE SPRINKLERS 1" BELOW THE BOTTOM OF THE FIRE PROOFING.
10. PROVIDE A PERMANENTLY ATTACHED NAME TAG TO THE RISER STATING THE REQUIRED DESIGN CRITERIA FOR EACH HYDRAULICALLY-DESIGNED SYSTEM.
11. PROVIDE SPRINKLERS UNDERNEATH ALL EXPOSED DUCTWORK WHICH IS OVER 48" WIDE AND SPACE HEADS AROUND ALL OBSTRUCTIONS IN ACCORDANCE WITH NFPA 13. HEADS UNDER DUCTS ARE NOT INDICATED ON THE DRAWINGS BUT ARE REQUIRED AND SHALL BE PROVIDED IN ACCORDANCE WITH NFPA 13. SPRINKLER LOCATIONS UNDER DUCTWORK AND AROUND OBSTRUCTIONS SHALL BE GOVERNED BY FINAL INSTALLED LOCATIONS.
12. PROVIDE SPRINKLER GUARDS ON ALL HEADS IN ELECTRIC ROOMS, TELEPHONE ROOMS, ELEVATOR ROOMS, ELEVATOR SHAFTS AND ON ANY HEADS LESS THAN 7'-0" ABOVE THE FLOOR.
13. IF SYSTEM PRESSURE EXCEEDS 100 PSI, ALL HANGERS ON END HEADS IN PENDANT POSITION SHALL BE WITHIN 12" OF END OF LINE IN ACCORDANCE WITH NFPA 13.
14. COORDINATE PIPING WITH ALL ELECTRICAL EQUIPMENT (PANELS, TRANSFORMERS, ETC.) PRIOR TO ANY INSTALLATION. DO NOT ROUTE ANY PIPING OVER ANY ELECTRICAL PANELS UNDER ANY CIRCUMSTANCES. ANY PIPING RUN OVER ELECTRICAL SHALL BE REROUTED AT NO ADDITIONAL COST.

TLC ENGINEERING FOR ARCHITECTURE
1650 Prudential Drive
Suite 200
Jacksonville, Florida 32207
Phone: 904-306-9111
Fax: 904-306-9117
www.tlc-engineers.com

© Copyright 2011 TLC Engineering for Architecture, Inc.

COA 15 TLC NO:812082
DRAWN BY: DJP CHECKED BY: BR
APPROVED BY: BR

GS&P
Design Services For The Built Environment
Atlanta
Birmingham
Charlotte
Cincinnati
Columbus
Dallas
Fort Lauderdale
Knoxville
Jackson
Jacksonville
Louisville
Memphis
Nashville
Richmond
Tampa

GRESHAM SMITH AND PARTNERS
5220 Belfort Road
Suite 100
Jacksonville, FL 32256
904.332.6699
FIRM'S FLORIDA CERT. NO. AAP000034/EB0003806 IB26000797

FLAGLER HOSPITAL
Excellence As A Way Of Life

IS PHASE II

CONSTRUCTION DOCUMENTS

SEAL:
Ryan Lime, P.E.
Florida License #73849

REVISION

No. -	Date -	Revision

LEGEND AND NOTES - FIRE PROTECTION

F0.01

PROJECT:27432.00
DATE: AUG 31, 2012

L:\2012-Jobs\812082-Flagler Hsp MOB (S Exp\CAD-MEP\Sheets F0.01.dwg 8/31/2012 9:16:11 AM djparker

TLC ENGINEERING FOR ARCHITECTURE
1650 Prudential Drive
Suite 200
Jacksonville, Florida 32207
Phone: 904-306-9111
Fax: 904-306-9117
www.tlc-engineers.com
© Copyright 2011 TLC Engineering for Architecture, Inc.

COA 15 TLC NO:812082
DRAWN BY: DJP CHECKED BY: BR
APPROVED BY: BR

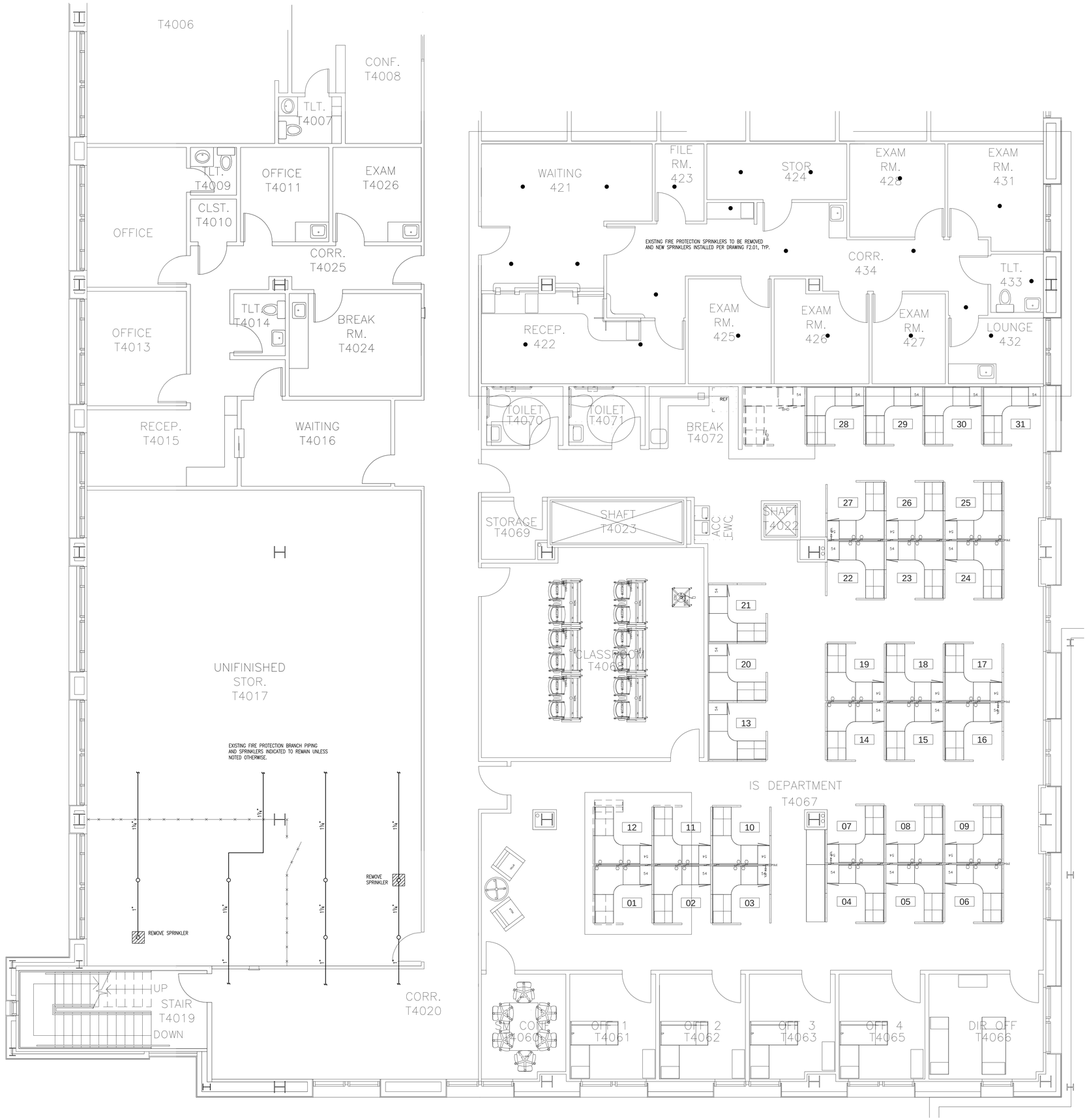

PARTIAL 4TH FLOOR DEMO PLAN – FIRE PROTECTION

SCALE: 1/4" = 1'-0"

G S & P
Design Services For The Built Environment
Atlanta
Birmingham
Charlotte
Cincinnati
Columbus
Dallas
Fort Lauderdale
Knoxville
Jackson
Jacksonville
Louisville
Memphis
Nashville
Richmond
Tampa

GRESHAM SMITH AND PARTNERS
5220 Belfort Road
Suite 100
Jacksonville, FL 32256
904.332.6699
FIRM'S FLORIDA CERT. NO.
AAP000034/EB0003806
IB26000797

FLAGLER HOSPITAL
Excellence As A Way Of Life

IS PHASE II

CONSTRUCTION DOCUMENTS

SEAL:
Ryan Lime, P.E.
Florida License #73849

REVISION

No.	Date	Revision

PARTIAL 4TH FLOOR DEMOLITION PLAN - FIRE PROTECTION

F1.01

PROJECT:27432.00
DATE: AUG 31, 2012

L:\2012-Jobs\812082-Flagler Hsp MOB IS Exp\CAD-MEP\Sheets F1.01.dwg 8/31/2012 9:16:24 AM djparker

TLC ENGINEERING FOR ARCHITECTURE
1650 Prudential Drive
Suite 200
Jacksonville, Florida 32207
Phone: 904-306-9111
Fax: 904-306-9117
www.tlc-engineers.com
© Copyright 2011 TLC Engineering for Architecture, Inc.

COA 15 TLC NO:812082
DRAWN BY: DJP CHECKED BY: BR
APPROVED BY: BR

PARTIAL 4TH FLOOR PLAN – FIRE PROTECTION
SCALE: 1/4" = 1'-0"

L:\2012-Jobs\812082-Flagler Hsp MOB IS Exp\CAD-MEP\Sheets F2.01.dwg 8/31/2012 1:45:44 PM djparker

G S & P

Design Services For The Built Environment

Atlanta
Birmingham
Charlotte
Cincinnati
Columbus
Dallas
Fort Lauderdale
Knoxville
Jackson
Jacksonville
Louisville
Memphis
Nashville
Richmond
Tampa

GRESHAM SMITH AND PARTNERS
5220 Belfort Road
Suite 100
Jacksonville, FL 32256
904.332.6699
FIRM'S FLORIDA CERT. NO.
AAP000034/EB0003806
IB26000797

FLAGLER HOSPITAL
Excellence As A Way Of Life

IS PHASE II

CONSTRUCTION DOCUMENTS

SEAL:
Ryan Lime, P.E.
Florida License #73849

REVISION

No.	Date	Revision

PARTIAL 4TH FLOOR PLAN - FIRE PROTECTION

F2.01

PROJECT:27432.00
DATE: AUG 31, 2012

MECHANICAL SPECIFICATIONS

BASIC MECHANICAL REQUIREMENTS

CONFLICTS: NOTHING CONTAINED HEREIN SHALL BE CONSTRUED TO CONFLICT IN ANY WAY WITH OTHER PROVISIONS OR REQUIREMENTS OF THE CONTRACT DOCUMENTS. THE INTENT IS THAT THIS SECTION WILL TAKE PRECEDENCE. WHERE DIFFERENCES ARISE, THE ARCHITECT SHALL DECIDE WHICH DIRECTIONS OR INSTRUCTIONS TAKE PRECEDENCE.

UNLESS AN ITEM IS SPECIFICALLY MENTIONED AS BEING PROVIDED BY OTHERS, THE REQUIREMENTS OF DIVISION 15 CONTRACT DOCUMENTS SHALL BE COMPLETED. THE SYSTEMS, EQUIPMENT, DEVICES AND ACCESSORIES SHALL BE INSTALLED, FINISHED, TESTED AND ADJUSTED FOR CONTINUOUS AND PROPER OPERATION. ANY APPARATUS, MATERIAL OR DEVICE NOT SHOWN ON THE DRAWINGS BUT MENTIONED IN THESE SPECIFICATIONS, OR VICE VERSA, OR ANY INCIDENTAL ACCESSORIES NECESSARY TO MAKE THE PROJECT COMPLETE AND OPERATIONAL IN ALL RESPECTS, SHALL BE FURNISHED, DELIVERED AND INSTALLED WITHOUT ADDITIONAL EXPENSE TO THE OWNER. INCLUDE ALL MATERIALS, EQUIPMENT, SUPERVISION, OPERATION, METHODS AND LABOR FOR THE FABRICATION, INSTALLATION, START-UP AND TESTS NECESSARY FOR COMPLETE AND PROPERLY FUNCTIONING SYSTEMS.

COMPLY WITH ALL RULES, REGULATIONS, STANDARDS, CODES, ORDINANCES AND LAWS OF LOCAL, STATE AND FEDERAL GOVERNMENTS AND THE AMENDMENTS AND INTERPRETATION OF SUCH RULES, REGULATIONS, STANDARDS, CODES, ORDINANCES AND LAWS OF LOCAL, STATE AND FEDERAL GOVERNMENTS BY THE AUTHORITIES HAVING LAWFUL JURISDICTION.

APPLICABLE CODES

A. STATE, COUNTY, AND CITY HEALTH AND BUILDING CODES.
B. NFPA 51B, 2009 EDITION.
C. NFPA 70, 2008 EDITION.
D. NFPA 72, 2007 EDITION.
E. NFPA 90A, 2009 EDITION.
F. NFPA 99, 2005 EDITION.
G. NFPA 101, FLORIDA 2009 EDITION.
H. FLORIDA BUILDING CODE - BUILDING, 2010 EDITION.
I. FLORIDA BUILDING CODE - MECHANICAL, 2010 EDITION.
J. FLORIDA BUILDING CODE - PLUMBING, 2010 EDITION.
K. OTHER NFPA CODES AS REFERENCED BY FLORIDA CODES.
L. ANSI A117.1-1992 - ACCESSIBLE AND USABLE BUILDINGS AND FACILITIES.
M. THE AMERICANS WITH DISABILITIES ACT (ADA), ACCESSIBILITY GUIDELINES FOR BUILDINGS AND FACILITIES-1991.

DRAWINGS AND SPECIFICATIONS
INTENT: THE INTENT OF THE DRAWINGS AND SPECIFICATIONS IS TO ESTABLISH MINIMUM ACCEPTABLE QUALITY STANDARDS FOR MATERIALS, EQUIPMENT AND WORKMANSHIP, AND TO PROVIDE OPERABLE MECHANICAL SYSTEMS COMPLETE IN EVERY RESPECT.

EQUIPMENT PLACEMENT: THE DRAWINGS ARE DIAGRAMMATIC, INTENDED TO SHOW GENERAL ARRANGEMENT, CAPACITY AND LOCATION OF VARIOUS COMPONENTS, EQUIPMENT AND DEVICES. EACH LOCATION SHALL BE DETERMINED BY REFERENCE TO THE GENERAL BUILDING PLANS AND BY ACTUAL MEASUREMENTS IN THE BUILDING AS BUILT. REASONABLE CHANGES

IN LOCATIONS ORDERED BY THE ARCHITECT PRIOR TO THE PERFORMANCE OF THE AFFECTED WORK SHALL BE PROVIDED AT NO ADDITIONAL COST TO THE OWNER.

DRAWING SCALE: DUE TO THE SMALL SCALE OF THE DRAWINGS, AND TO UNFORESEEN JOB CONDITIONS, ALL REQUIRED OFFSETS, TRANSITIONS AND FITTINGS MAY NOT BE SHOWN BUT SHALL BE PROVIDED AT NO ADDITIONAL COST.

CONFLICT: IN THE EVENT OF A CONFLICT, THE ARCHITECT WILL RENDER AN INTERPRETATION IN ACCORDANCE WITH THE GENERAL CONDITIONS.

ABBREVIATIONS: ABBREVIATIONS, WHERE NOT DEFINED IN THE CONTRACT DOCUMENTS, SHALL BE INTERPRETED TO MEAN THE NORMAL CONSTRUCTION INDUSTRY TERMINOLOGY, AS DETERMINED BY THE ARCHITECT. PLURAL WORDS SHALL BE INTERPRETED AS SINGULAR AND SINGULAR WORDS SHALL BE INTERPRETED AS PLURAL WHERE APPLICABLE FOR CONTEXT OF THE CONTRACT DOCUMENTS.

WORKMANSHIP
GENERAL: THE INSTALLATION OF MATERIALS AND EQUIPMENT SHALL BE DONE IN A NEAT, WORKMANLIKE AND TIMELY MANNER BY AN ADEQUATE NUMBER OF CRAFTSMEN KNOWLEDGEABLE OF THE REQUIREMENTS OF THE CONTRACT DOCUMENTS. THEY SHALL BE SKILLED IN THE METHODS AND CRAFTSMANSHIP NEEDED TO PRODUCE A FIRST-QUALITY INSTALLATION. PERSONNEL WHO INSTALL MATERIALS AND EQUIPMENT SHALL BE QUALIFIED BY TRAINING AND EXPERIENCE TO PERFORM THEIR ASSIGNED TASKS.

HOUSEKEEPING: KEEP INTERIORS OF DUCT AND PIPE SYSTEMS CLEAN AND FREE FROM DIRT, RUBBISH AND FOREIGN MATTER. CLOSE OPEN ENDS OF PIPING AND DUCTWORK AT ALL TIMES THROUGHOUT THE INSTALLATION.

EQUIPMENT PROTECTION: PROTECT FAN MOTORS, SWITCHES, EQUIPMENT, FIXTURES, AND OTHER ITEMS FROM DIRT, RUBBISH AND FOREIGN MATTER. DO NOT OPERATE AIR HANDLING EQUIPMENT IF THE BUILDING IS NOT CLEAN OR IF DUST CAN ENTER THE COILS OR THE FAN HOUSINGS.

EQUIPMENT CLEANING: THOROUGHLY CLEAN EQUIPMENT AND ENTIRE PIPING SYSTEMS INTERNALLY UPON COMPLETION OF INSTALLATION AND IMMEDIATELY PRIOR TO FINAL ACCEPTANCE.

BUILDING CLEANUP: REMOVE DEBRIS, RUBBISH, LEFTOVER MATERIALS, TOOLS AND EQUIPMENT FROM WORK AREAS AND SITE. CLEAN TUNNELS AND CLOSED OFF SPACES OF PACKING BOXES, WOOD FRAME MEMBERS AND OTHER WASTE MATERIALS USED IN THE INSTALLATION.

FILTER REPLACEMENT: PROVIDE FILTERS, WITH THE SAME EFFICIENCY RATING AS REQUIRED FOR THE FINAL INSTALLATION, FOR THE PROTECTION OF THE AIR MOVING EQUIPMENT AND DUCTWORK CONTINUOUSLY THROUGHOUT THE CONSTRUCTION PHASE. PROVIDE A NEW SET OF CLEAN FILTERS FOR THE TEST AND BALANCE OF THE AIR SIDE EQUIPMENT.

PROTECTION OF FINISHED INSTALLATION: WHERE INSTALLATION IS REQUIRED IN AREAS PREVIOUSLY FINISHED BY OTHER TRADES, PROTECT THE AREA FROM MARRING, SOILING OR OTHER DAMAGE.

CORRECTION OF WORK
GENERAL: AT NO ADDITIONAL COST TO THE OWNER, RECTIFY DISCREPANCIES BETWEEN THE ACTUAL INSTALLATION AND CONTRACT DOCUMENTS WHEN IN THE OPINION OF THE T&B AGENCY OR THE ARCHITECT THE DISCREPANCIES WILL AFFECT SYSTEM BALANCE AND PERFORMANCE.

DRIVE CHANGES: INCLUDE THE COST OF ALL PULLEY, BELT, AND DRIVE CHANGES, AS WELL AS BALANCING DAMPERS, VALVES AND FITTINGS, AND ACCESS PANELS TO ACHIEVE PROPER SYSTEM BALANCE RECOMMENDED BY THE T&B AGENCY.

COORDINATION AND ASSISTANCE
GENERAL: PROVIDE ALL LABOR, EQUIPMENT, TOOLS AND MATERIAL REQUIRED TO OPERATE THE EQUIPMENT AND SYSTEMS NECESSARY FOR THE TESTING AND BALANCING OF THE SYSTEMS.

COORDINATE THE OPERATION OF THESE SYSTEMS WITH THE OWNER PROVIDED T&B AGENCY. CORRECT DEFICIENCIES NOTED BY THE T&B AGENCY. THE CONTRACTOR WILL BE HELD LIABLE FOR RETEST/REBALANCE REQUIRED FROM CONTRACTOR RELATED SYSTEM DEFIECIENCES.

DRAWINGS AND SPECIFICATIONS: PROVIDE TO THE T&B AGENCY A COMPLETE SET OF PROJECT RECORD DRAWINGS AND SPECIFICATIONS AND AN APPROVED COPY OF ALL HVAC SHOP DRAWINGS AND EQUIPMENT SUBMITTALS. THE T&B AGENCY SHALL BE INFORMED OF ALL CHANGES MADE TO THE SYSTEM DURING CONSTRUCTION, INCLUDING APPLICABLE CHANGE ORDERS.

COORDINATION: COORDINATE THE WORK OF ALL TRADES AND EQUIPMENT SUPPLIERS TO COMPLETE THE MODIFICATIONS RECOMMENDED BY THE T&B AGENCY AND ACCEPTED BY THE ARCHITECT. CUT OR DRILL HOLES FOR THE INSERTION OF AIR MEASURING DEVICES AS DIRECTED FOR TEST PURPOSES; REPAIR TO AS-NEW CONDITION, INSERTING PLASTIC CAPS OR COVERS TO PREVENT AIR LEAKAGE. REPAIR OR REPLACE INSULATION AND RE-ESTABLISH THE INTEGRITY OF THE VAPOR RETARDANT.

PROTECTION OF MATERIALS AND EQUIPMENT
REPLACEMENT OF DAMAGED STORED MATERIAL AND EQUIPMENT: ANY MATERIAL AND EQUIPMENT THAT HAS BEEN WET OR OTHERWISE DAMAGED PRIOR TO INSTALLATION, IN THE OPINION OF THE ARCHITECT, SHALL BE REPLACED WITH NEW MATERIAL REGARDLESS OF THE CONDITION OF THE MATERIAL AND EQUIPMENT AT THE TIME OF INSTALLATION.

REPAIR OF DAMAGED EXISTING MATERIAL AND EQUIPMENT: AFTER INSTALLATION CORRECT OR REPAIR DENTS, SCRATCHES AND OTHER VISIBLE BLEMISHES. AT THE DIRECTION OF ARCHITECT REPLACE OR REPAIR TO "AS NEW" CONDITION EQUIPMENT THAT HAS BEEN DAMAGED DURING CONSTRUCTION.

ASBESTOS AND HAZARDOUS MATERIALS
GENERAL: SHOULD ASBESTOS OR OTHER HAZARDOUS MATERIAL BE ENCOUNTERED DURING EXECUTION OF THE WORK, OR SHOULD THE PRESENCE OF ASBESTOS OR OTHER HAZARDOUS MATERIAL BE SUSPECTED, IMMEDIATELY NOTIFY THE ARCHITECT AND SUSPEND WORK IN THE AFFECTED AREA. THE OWNER WILL INITIATE A STUDY TO DETERMINE IF ASBESTOS OR OTHER HAZARDOUS MATERIALS ARE PRESENT AND WILL DETERMINE WHAT ACTION WILL BE TAKEN. REMOVAL OF ASBESTOS OR OTHER HAZARDOUS MATERIALS WILL BE DONE UNDER A SEPARATE CONTRACT.

COORDINATION OF SERVICES
GENERAL: COORDINATE INTERRUPTION OF SERVICES TO OWNER-OCCUPIED AREAS IN WRITING IN ADVANCE WITH THE ARCHITECT. THE OWNER SHALL DECIDE SHUTDOWN TIME AND DURATION OF SERVICES INTERRUPTION. PROVIDE SHUTOFF VALVES AT POINTS OF INTERCONNECTION TO MINIMIZE DOWNTIME. PROCEDURES INCIDENTAL TO THE OUTAGE SHALL BE PREPARED IN ADVANCE TO MINIMIZE DOWNTIME.

GENERAL: COORDINATE INTERRUPTION OF EXISTING SERVICES IN WRITING AT LEAST 1 WEEK IN ADVANCE WITH THE ARCHITECT. THE OWNER SHALL DECIDE SHUTDOWN TIME AND DURATION OF SERVICES INTERRUPTION. PROVIDE SHUTOFF VALVES AT POINTS OF INTERCONNECTION TO MINIMIZE DOWNTIME. PROCEDURES INCIDENTAL TO THE OUTAGE SHALL BE PREPARED IN ADVANCE TO MINIMIZE DOWNTIME.

FIRE SAFETY IN EXISTING FACILITIES: DO NOT DECREASE THE FIRE RATING OF WALLS, PARTITIONS, CEILINGS, FLOORS, DOORS OR COMBINATIONS THEREOF IN ADJACENT AREAS OR MEANS OF EGRESS. DO NOT INTERRUPT FIRE SPRINKLING OR LIFE SAFETY SYSTEMS WITHOUT PRIOR COORDINATION WITH THE ARCHITECT. INFORM ALL NECESSARY PARTIES (FIRE DEPARTMENT, OWNER'S INSURANCE CARRIER, ETC.) IN ADVANCE, PRIOR TO AND IMMEDIATELY AFTER SHUTDOWN, DISCONNECTION OR ISOLATION OF ANY PORTION OF LIFE SAFETY OR FIRE SPRINKLER SYSTEM.

LAYOUT OF EXISTING EQUIPMENT
GENERAL: EXISTING EQUIPMENT, PIPING, DUCTWORK, ETC., AS INDICATED ON THE DRAWINGS HAVE, FOR THE MOST PART, BEEN PROVIDED TO THE ARCHITECT THROUGH EXISTING DRAWINGS. THE LAYOUTS SHOWN MAY NOT BE FROM AS-BUILT DRAWINGS AND MAY BE FROM PARTIAL COPIES OF ORIGINAL DESIGN DOCUMENTS NOT PRODUCED BY THE ARCHITECT. THE ARCHITECT IS NOT RESPONSIBLE FOR THE ACCURACY NOR COMPLETENESS OF THE EXISTING INSTALLATION AND ALL LAYOUTS ARE SHOWN FOR REFERENCE ONLY. IT IS TO BE UNDERSTOOD THAT UNFORESEEN CONDITIONS PROBABLY EXIST AND THAT EXISTING AND NEW WORK MAY NOT BE FIELD LOCATED EXACTLY AS SHOWN ON THE DRAWINGS. VERIFY EXISTING CONDITIONS IN THE FIELD AND NOTIFY THE ARCHITECT OF ANY DEVIATIONS REQUIRED TO INSTALL THE WORK AS SHOWN. COORDINATE NEW WORK WITH EXISTING EQUIPMENT, INCLUDING REMOVING, RELOCATING, REROUTING, EXTENDING WITH NEW MATERIALS, AND REINSTALL EXISTING PIPING, DUCTWORK, CONDUITS, WIRING, TUBING, SUPPORTS AND OTHER EQUIPMENT. THE ARCHITECT SHALL MAKE THE FINAL DECISION ON ALL DEVIATIONS OR MODIFICATIONS REQUIRED BY THE EXISTING CONDITIONS.

CLEAN-UP
GENERAL: DEBRIS AND RUBBISH SHALL NOT BE DISPOSED INTO THE OWNER'S CONTAINERS.

PERFORMANCE VERIFICATION

TEST AND BALANCE AGENCY
GENERAL: PERFORMANCE VERIFICATION SHALL BE PERFORMED BY AN INDEPENDENT T&B AGENCY.

CERTIFICATION: THE T&B AGENCY SHALL BE A CERTIFIED MEMBER OF THE ASSOCIATED AIR BALANCE COUNCIL (AABC) OR THE NATIONAL ENVIRONMENTAL BALANCING BUREAU (NEBB).

WORK INCLUDED
GENERAL: THE T&B AGENCY SHALL PROVIDE ALL LABOR, SUPERVISION, PROFESSIONAL SERVICES, TOOLS, TEST EQUIPMENT AND INSTRUMENTS (EXCEPT AS OTHERWISE INDICATED) TO PERFORM WORK OF THIS SECTION; INCLUDING BUT NOT LIMITED TO:

REVIEW THE AUTOMATIC TEMPERATURE CONTROL AND AIR TERMINAL UNIT SPECIFICATIONS FOR THEIR EFFECTS ON THE TESTING AND BALANCING PROCEDURES FOR THE AIR SYSTEMS.

WHERE CONDITIONS MAY EXIST IN THE SYSTEM DESIGN OR CONSTRUCTION WHICH MAY ADVERSELY AFFECT SYSTEM PERFORMANCE, IDENTIFY THE CONDITIONS AND SUBMIT RECOMMENDED CORRECTIONS IN WRITING FOR CONSIDERATION BY THE ARCHITECT.

PERFORM A COMPLETE AIR TEST AND BALANCE OF ALL HEATING, VENTILATING, AIR CONDITIONING AND EXHAUST AIR SYSTEMS SHOWN AND DESCRIBED ON THE CONTRACT DOCUMENTS.

REPORT
RECORDS: RECORDED TEST DATA SHALL BE AT THE FINAL BALANCED CONDITION FOR EACH SYSTEM, AND SHALL BE ARRANGED BY SYSTEM USING THE APPROPRIATE DESIGNATION AS ESTABLISHED ON THE CONTRACT DOCUMENTS. 6 COPIES OF THE TYPEWRITTEN, SIGNED, BOUND AND INDEXED FINAL REPORT SHALL BE SUBMITTED TO THE ARCHITECT FOR REVIEW PRIOR TO REQUEST FOR SUBSTANTIAL COMPLETION INSPECTION. THE SUBSTANTIAL COMPLETION INSPECTION SHALL NOT BE SCHEDULED UNTIL THE FINAL REPORT HAS BEEN RECEIVED AND IS ACCEPTABLE TO THE ARCHITECT. REPORT FORMAT SHALL BE SIMILAR TO FORMS APPROVED FOR USE BY SMACNA OR AABC.

MEASUREMENTS: WHERE ACTUAL MEASUREMENTS RECORDED FOR THE FINAL BALANCE SHOW DEVIATIONS OF MORE THAN 10 PERCENT FROM THE DESIGN, THE T&B AGENCY SHALL NOTE SAME IN THE REPORT AND SUBMIT RECOMMENDATIONS FOR CORRECTIVE ACTION TO THE ARCHITECT.

VIBRATION: WHERE, IN THE OPINION OF THE T&B AGENCY, THERE IS EXCESSIVE VIBRATION, MOVEMENT OR NOISE FROM ANY PIECE OF EQUIPMENT, DUCTWORK, PIPES, ETC., THE T&B AGENCY SHALL NOTE SAME IN THE REPORT AND SUBMIT RECOMMENDATIONS FOR CORRECTIVE ACTION TO THE ARCHITECT.

CONTROLS: THE T&B AGENCY SHALL VERIFY THAT EACH CONTROLLER AND THE DEVICES IT CONTROLS, SUCH AS CONTROL VALVES, MOTORIZED DAMPERS, VAV BOXES, ETC., OPERATES IN THE EXACT SEQUENCE REQUIRED.

TEST DATA: PROVIDE TEST AND BALANCE REPORT PRIOR TO AND AFTER THE BALANCING OF EACH CONSTRUCTION PHASE.
INCLUDE THE FOLLOWING DATA IN THE SYSTEMS TEST AND BALANCE REPORT:

AIR SYSTEMS (INCLUDING INLETS AND OUTLETS):

- GRILLE OR DIFFUSER REFERENCE NUMBER, MANUFACTURER, AND TYPE
- GRILLE OR DIFFUSER LOCATION
- DESIGN AND MEASURED CFM
- TABULATION OF DESIGN AND MEASURED CFM FOR EACH INLET OR OUTLET
- A SUMMARIZATION BY SYSTEM TO COMPARE DESIGN DATA TO ACTUAL

DUCTWORK

APPLICABLE STANDARDS
SMACNA: USE MATERIAL, WEIGHT, THICKNESS, GAUGE, REINFORCING, SEAMS AND JOINTS, SUSPENSION, WORKMANSHIP AND CONSTRUCTION AND INSTALLATION METHODS AS OUTLINED IN THE SHEET METAL AND AIR CONDITIONING CONTRACTORS NATIONAL ASSOCIATION, INC., HVAC DUCT CONSTRUCTION STANDARDS, METAL & FLEXIBLE, FIRST EDITION, 1985. MANUFACTURED ROUND OR OVAL DUCTWORK SHALL COMPLY WITH THE MANUFACTURER'S PUBLISHED RECOMMENDATIONS AND INSTALLATION INSTRUCTIONS.

SHEET METAL DUCTWORK
MATERIAL: PRIME QUALITY 48 INCH WIDE RESQUARE TIGHT COAT COLD-ROLLED HOT-DIPPED GALVANIZED STEEL CAPABLE OF DOUBLE SEAMING WITHOUT FRACTURE. CONFORM TO THE REQUIREMENTS OF ASTM A-525 AND ASTM-G90 FOR A MINIMUM GALVANIZING COAT OF 1.25 OUNCES PER SQUARE FOOT TOTAL FOR BOTH SIDES.

ALL DUCT SUPPORTS SHALL BE SUPPORTED FROM STRUCTURAL MEMBERS NO PENETRATIONS OF THE ROOF DECK IS ALLOWED.

PROHIBITED DUCT LOCATIONS: DO NOT ROUTE DUCTWORK THROUGH TRANSFORMER VAULTS, OR INTO ELECTRICAL ROOMS OR ELEVATOR EQUIPMENT SPACES UNLESS THE DUCTWORK IS DEDICATED TO SERVING THAT SPACE. DO NOT INSTALL DUCTWORK OVER ELEVATOR EQUIPMENT, ELECTRICAL DISTRIBUTION PANELS OR MOTOR CONTROL STATIONS.

BALANCING DEVICES: IN ORDER TO MAINTAIN CLARITY OF THE DRAWINGS, NOT ALL REQUIRED DUCT BALANCING DAMPERS ARE INDICATED. HOWEVER, PROVIDE EACH DUCT BRANCH AND EACH DUCT TAKEOFF WITH A BALANCING DAMPER TO ASSURE CORRECT BALANCE AND QUIET DISTRIBUTION OF INDICATED AIR QUANTITIES.

EQUIPMENT CONNECTIONS: PROVIDE AND INSTALL ALL DUCT CONNECTIONS TO AIR HANDLING UNITS AND FANS AND PROVIDE FLEXIBLE CONNECTIONS, ELBOWS AND BENDS WHICH MINIMIZE NOISE AND PRESSURE DROP. PROVIDE FLEXIBLE CONNECTIONS BETWEEN DUCTWORK AND ALL ROTATING OR VIBRATING EQUIPMENT.

COORDINATION: COORDINATE DIMENSIONS AT INTERFACES OF DISSIMILAR TYPE OF DUCTWORK AND AT INTERFACES OF DUCTWORK WITH EQUIPMENT SO THAT PROPER OVERLAPS, INTERFACES, ETC., OF INSULATION AND CONTINUITY OF VAPOR BARRIERS ARE MAINTAINED. WHERE DUCTS OF TWO DISSIMILAR METALS MEET, THE JOINTS SHALL BE INSTALLED SUCH THAT THE METALS DO NOT CONTACT EACH OTHER.

SUPPLY, RETURN, INTAKE, EXHAUST AND RELIEF DUCTWORK
MINIMUM REQUIREMENTS: UNLESS OTHERWISE INDICATED ALL DUCTWORK SHALL COMPLY WITH THE FOLLOWING MINIMUM PRESSURE REQUIREMENTS:

3 INCH W.G. PRESSURE:

FROM THE SUPPLY FAN DISCHARGE TO A TERMINAL UNIT OR ZONE DAMPER INLET.

2 INCH W.G. PRESSURE:

FROM THE SUPPLY FAN DISCHARGE TO A ROOM SUPPLY AIR DEVICE.

FROM THE RETURN AIR INLET DEVICE TO THE INLET OF THE RETURN FAN OR AIR HANDLING FAN RETURN CONNECTION.

1 INCH W.G. PRESSURE:

FROM THE DISCHARGE SIDE OF A TERMINAL UNIT TO THE ROOM SUPPLY AIR DEVICE.

FROM THE ROOM EXHAUST DEVICE TO THE INLET OF THE ROOF EXHAUST FAN.

ALL SUPPLY, RETURN AND OUTSIDE AIR DUCTS SHALL BE EXTERNALLY INSULATED EXTENDING FROM SUPPLY FAN DISCHARGE, THROUGHOUT SYSTEM, TO ALL OUTLETS.

TOILET EXHAUST, GENERAL EXHAUST: DUCTWORK SHALL NOT HAVE INTERNAL INSULATION, AND DOES NOT HAVE TO BE EXTERNALLY INSULATED UNLESS OTHERWISE INDICATED.

CHANGES IN SHAPE OR DIMENSION
CRITERIA: WHERE DUCT SIZE OR SHAPE IS ALTERED TO EFFECT A CHANGE IN AREA, THE FOLLOWING SHALL APPLY:

DO NOT EXCEED A SLOPE OF 1 INCH IN 7 INCHES FOR TRANSITIONS WITH INCREASING AREA.

DO NOT EXCEED A SLOPE OF 1 INCH IN 4 INCHES FOR TRANSITIONS WITH DECREASING AREA; 1 INCH IN 7 INCHES IS PREFERABLE AND SHOULD BE USED WHEREVER POSSIBLE.

TRANSITION ANGLES SHALL NOT EXCEED 30 DEGREES AT INLET CONNECTIONS TO COILS OR OTHER EQUIPMENT, NOR 15 DEGREES AT OUTLET CONNECTIONS.

FLEXIBLE DUCTS
INSULATED FLEXIBLE DUCTS, FIBERGLASS: FLEXIBLE DUCT SHALL BE FACTORY-FABRICATED PRE-INSULATED TYPE WITH SEAMLESS VAPOR BARRIER. FIBERGLASS INSULATION SHALL BE NOMINAL 1 INCH THICKNESS WITH MAXIMUM THERMAL CONDUCTANCE OF 0.23 BTU/HR-SQ.FT.-DEGREE F. AT 75 DEGREE F. MEAN TEMPERATURE. FLEXIBLE DUCT SHALL HAVE AN OPERATING PRESSURE RANGE OF MINUS 3.0 INCH W.G. TO PLUS 6 INCH W.G., MAXIMUM WORKING VELOCITY TO 4000 FPM AND TEMPERATURE RANGE TO 250 DEGREE F. PROVIDE FLEX SIMILAR TO THERMOFLEX MK-E OR FLEXMASTER 1M.

THERMAL INSULATION

PERFORMANCE DATA:

PROVIDE THERMAL PERFORMANCE, DENSITY AND VAPOR PERMEANCE FOR EACH TYPE OF INSULATION, FINISH, COVER, FACING OR JACKET SPECIFIED IN THIS DOCUMENT

UNLESS OTHERWISE STATED, INSULATION TYPES AND THICKNESSES SPECIFIED ARE BASED ON INSULATING MATERIALS HAVING A "K" VALUE (BTU PER HOUR PER SQUARE FOOT PER DEGREE TEMPERATURE DIFFERENCE) PER INCH OF THICKNESS AS INDICATED.

VAPOR PERMEANCE IS BASED ON VAPOR RETARDANT MATERIALS HAVING WATER VAPOR TRANSMISSION RATES IN PERMS (GRAINS OF VAPOR PER HOUR PER SQUARE FOOT PER INCH OF MERCURY VAPOR PRESSURE DIFFERENTIAL).

ALTERNATE MATERIALS SHALL BE APPROVED ON THE BASIS OF THICKNESSES PROVIDING EQUIVALENT HEAT TRANSFER OR VAPOR TRANSMISSION RATES.

APPLICABLE STANDARDS

NFPA: ALL MATERIALS AND ADHESIVES USED SHALL CONFORM TO THE REQUIREMENTS OF THE CURRENT NFPA 90A, AS TO FLAME SPREAD AND SMOKE DEVELOPED RATINGS THROUGHOUT THEIR OPERATING TEMPERATURE RANGE. ALL INSULATION, JACKETS, FACINGS AND ADHESIVES USED TO ADHERE THE JACKET OR FACING TO THE INSULATION, INCLUDING FITTINGS AND BUTT STRIPS, SHALL HAVE A NON-COMBUSTIBLE FIRE AND SMOKE HAZARD RATING AND LABEL AS TESTED BY ASTM E-84, NFPA 255 AND UL-723 NOT EXCEEDING FLAME SPREAD VALUE OF 25 AND SMOKE DEVELOPED/FUEL CONTRIBUTED VALUE OF 50. ACCESSORIES SUCH AS MASTICS, CEMENTS, TAPES AND CLOTH FOR FITTINGS SHALL HAVE THE SAME RATINGS.

FLORIDA BUILDING CODE: INSULATION THERMAL CONDUCTANCE VALUES AND INSULATION THICKNESS SHALL COMPLY WITH THE FLORIDA BUILDING CODE - MECHANICAL, 2010 EDITION.

INSULATION FOR DUCT SYSTEMS
GENERAL: AIR HANDLING UNIT CASINGS DOWNSTREAM OF COOLING COILS SHALL BE INSULATED. INSULATE SUPPLY AIR DUCTS FOR HEATING AND AIR CONDITIONING SYSTEMS FROM SUPPLY FAN DISCHARGE TO ROOM OUTLETS ON ALL SYSTEMS. OUTSIDE AIR DUCTS SHALL BE EXTERNALLY INSULATED, EXCEPT WHERE LOCATED IN MECHANICAL EQUIPMENT ROOMS.

INSULATE WITH A MINIMUM OF 2 INCH THICK FIBERGLASS BLANKET WRAP APPLIED OVER CLEAN, DRY SHEET METAL DUCTWORK INSTALLED TO ALLOW MAXIMUM FULLNESS AT CORNERS (AVOID EXCESSIVE COMPRESSION). ADHERE DUCT INSULATION TO METAL AND PROVIDE CONTINUITY OF VAPOR RETARDANT IN ACCORDANCE WITH THE MANUFACTURER'S RECOMMENDATIONS. WHERE DUCT WIDTH EXCEEDS 24 INCHES, THE INSULATION SHALL BE ADDITIONALLY SECURED TO THE BOTTOM OF THE DUCT USING MECHANICAL FASTENERS SPACED 1 FOOT ON CENTER TO PREVENT SAGGING OF THE INSULATION.

DUCTWORK INSULATION SHALL BE INORGANIC FIBROUS GLASS, FLEXIBLE BLANKET OF GLASS FIBER FACTORY LAMINATED TO A REINFORCED FOIL KRAFT (FRK) VAPOR RETARDANT WITH A MINIMUM 2 INCH TAPING AND STAPLING FLANGE ON ONE EDGE.

DEGREES F. THERMAL CONDUCTIVITY OF 0.31 AT 75 DEGREES F. MINIMUM DENSITY OF 1-1/2 PCF.

MANUFACTURER:
OWENS-CORNING
CERTAINTEED
KNAUF

FIRE DAMPERS

FIRE DAMPERS SHALL COMPLY WITH UNDERWRITERS LABORATORIES (UL) STANDARD 555 AND BEAR THE UL TEST LABEL WITH A 1-1/2 HOUR FIRE PROTECTION RATING FOR PENETRATIONS IN 1-HOUR AND 2-HOUR RATED PARTITIONS, AND A 3-HOUR FIRE PROTECTION RATING FOR PENETRATIONS IN 3-HOUR RATED PARTITIONS. DAMPERS SHALL BE TESTED UNDER DYNAMIC LOAD.

DAMPERS SHALL BE SELECTED SO THAT THE FREE AIR SPACE IS NOT LESS THAN THE CONNECTED DUCT FREE AREA.

COORDINATION DRAWINGS:

PROVIDE COMPLETE COORDINATION DRAWINGS OF M,P,E, AND FP SYSTEMS BEFORE FABRICATION AND INSTALLATION OF ANY MATERIAL. ALL STRUCTURAL AND ARCHITECTURAL COMPONENTS WILL BE PART OF DRAWINGS AND ALL EXISTING MATERIALS NOT BEING REMOVED.

PROVIDE FINAL AS-BUILT DRAWINGS IN SAME SCALE AS CONSTRUCTION DOCUMENTS. PROVIDE BOTH HARDCOPY AND PDF ELECTRONIC FORMAT.

HVAC SYMBOL LEGEND

SYMBOL	DESCRIPTION
	-CEILING DIFFUSER, ROUND NECK (CEILING DIFFUSERS ARE 4-WAY THROW UNO)
	-CEILING RETURN
	-CEILING EXHAUST
	-CEILING DIFFUSER, RECTANGULAR OR SQUARE NECK (CEILING DIFFUSERS ARE 4-WAY THROW UNO)
	-SUPPLY REGISTER OR GRILLE (VERTICAL MOUNT, SIDEWALL)
	-RETURN/EXHAUST REGISTER OR GRILLE (VERTICAL MOUNT, SIDEWALL)
1	-REVISION REFERENCE
T	-THERMOSTAT/TEMPERATURE SENSOR
H	-HUMIDISTAT/HUMIDITY SENSOR
	-DUCT SMOKE DETECTOR
	-CONNECT TO EXISTING
	-DEMOLISH TO POINT INDICATED
M	-MOTORIZED CONTROL DAMPER
1	-SHEET NOTE CALLOUT
	-FIRE DAMPER (WITH ACCESS PANEL)
	-EXISTING FIRE DAMPER TO REMAIN
	-MANUAL BALANCING DAMPER
UC	-UNDERCUT DOOR
24x12	-NEW DUCTWORK
24x12	-EXISTING DUCTWORK TO REMAIN
24x12	-EXISTING DUCTWORK TO BE REMOVED
DOWN / UP W/IN FLOOR	-DUCT ELBOW, POSITIVE PRESSURE (SUPPLY)
	-DUCT ELBOW, EXHAUST
	-DUCT ELBOW, NEGATIVE PRESSURE, RETURN
	-DUCT ELBOW UP THROUGH ROOF OR SLAB ABOVE
	-RECTANGULAR DUCT SECTION UP, POSITIVE PRESSURE, SUPPLY OR OUTSIDE AIR
	-RECTANGULAR DUCT SECTION UP, NEGATIVE PRESSURE, RETURN
	-RECTANGULAR DUCT SECTION UP, EXHAUST
	-EXHAUST DUCT UP THROUGH SLAB W/ FAN ON ROOF ABOVE
	-EXHAUST FAN ON ROOF W/ DUCT DOWN THROUGH ROOF
	-TERMINAL UNIT W/ HEATING COIL
	-FLEXIBLE DUCT
	-TRANSITION, CONCENTRIC
	-TRANSITION, ECCENTRIC
10x8 8ø	-TRANSITION, SQUARE TO ROUND
	-SQUARE THROAT ELBOW W/TURNING VANES
	-RADIUS ELBOW
	-RECTANGULAR/ROUND BRANCH TAKE-OFF OR ROUND/ROUND BRANCH TAKE-OFF
	-RECTANGLE-TO-ROUND TAKE-OFF
	-STANDARD BRANCH TAKE-OFF
	-SPIN-IN TAKE-OFF

NOTE: SOME SYMBOLS SHOWN ON THIS LEGEND MAY NOT PERTAIN TO THIS PROJECT

HVAC ABBREVIATIONS

SYMBOL	DESCRIPTION	SYMBOL	DESCRIPTION
AFD	-ADJUSTABLE FREQUENCY DRIVE	GPM	-GALLONS PER MINUTE
AFF	-ABOVE FINISHED FLOOR	LAT	-LEAVING AIR TEMPERATURE
AFR	-ABOVE FINISHED ROOF	LWT	-LEAVING WATER TEMPERATURE
AHU	-AIR HANDLING UNIT	MBH	-THOUSAND BTU¾ PER HOUR
AP	-ACCESS PANEL	NC	-NORMALLY CLOSED
BOP	-BOTTOM OF PIPE	NO	-NORMALLY OPEN
BHP	-BRAKE HORSEPOWER	NTS	-NOT TO SCALE
BTU	-BRITISH THERMAL UNIT	OA	-OUTSIDE AIR
℄	-CENTER LINE	OAL	-OUTSIDE AIR LOUVER
∮	-CFM (CUBIC FEET PER MINUTE)	PRV	-PRESSURE REDUCING VALVE
CD	-CEILING DIFFUSER	PRS	-PRESSURE REDUCING STATION
CT	-COOLING TOWER	PSI	-POUNDS PER SQUARE INCH
CV	-CONSTANT AIR VOLUME	RA	-RETURN AIR
CFM	-CUBIC FEET PER MINUTE	RHC	-REHEAT COIL
CU	-CONDENSING UNIT	RPM	-REVOLUTIONS PER MINUTE
DDC	-DIRECT DIGITAL CONTROLS	SA	-SUPPLY AIR
DN	-DOWN	SP	-STATIC PRESSURE
EAT	-ENTERING AIR TEMPERATURE	TSP	-TOTAL STATIC PRESSURE
ESP	-EXTERNAL STATIC PRESSURE	UNO	-UNLESS NOTED OTHERWISE
EWT	-ENTERING WATER TEMPERATURE	V/PH	-VOLTS/PHASE
FD	-FIRE DAMPER	VAV	-VARIABLE AIR VOLUME
FF	-FINAL FILTERS	VFD	-VARIABLE FREQUENCY DRIVE
FPM	-FEET PER MINUTE		

HVAC PIPING SYMBOL LEGEND

SYMBOL	DESCRIPTION
HWR	-HOT WATER RETURN
HWS	-HOT WATER SUPPLY
	-CAP
	-CONNECTION, BOTTOM
	-CONNECTION, TOP
	-COUPLING
	-ELBOW, 90°
	-ELBOW, 45°
	-ELBOW, TURNED DOWN
	-ELBOW, TURNED UP
	-TEE, OUTLET DOWN
	-TEE, OUTLET UP
D	-45° PIPE RISE (R) / DROP (D)
	-PIPE ANCHORS
	-CONCENTRIC REDUCER
	-ECCENTRIC REDUCER

GENERAL NOTES

1. CONNECTION TO EQUIPMENT SHALL BE VERIFIED WITH MANUFACTURER'S CERTIFIED DRAWINGS. TRANSITIONS TO ALL EQUIPMENT SHALL BE VERIFIED AND PROVIDED FOR EQUIPMENT FURNISHED.
2. DIMENSIONS SHALL BE FIELD-VERIFIED AND COORDINATED PRIOR TO PROCUREMENT OR FABRICATION. COORDINATE THE WORK WITH OTHER TRADES INVOLVED. FIELD MODIFICATIONS SUCH AS OFFSETS IN PIPING OR DUCTWORK (INCLUDING DIVIDED DUCTWORK) NEEDED DUE TO OBSTRUCTIONS OR INTERFERENCES SHALL BE PROVIDED AT NO ADDITIONAL COST. FOR PROJECTS INVOLVING RENOVATION, COORDINATE NEW WORK WITH EXISTING ELEMENTS SUCH AS THE BUILDING STRUCTURE AND ARCHITECTURAL FEATURES, SPRINKLER PIPING, LIGHTS, PLUMBING, AND ELECTRICAL CONDUIT.
3. DUCT CONSTRUCTION SHALL BE IN ACCORDANCE WITH THE LATEST EDITION OF THE SMACNA HVAC DUCT CONSTRUCTION STANDARD.
4. SEE SPECIFICATIONS FOR GAUGES, THICKNESS, BRACING, REQUIREMENTS, ETC., OF DUCTWORK.
5. PROVIDE AIR TURNING VANES IN ALL 90 DEGREE RECTANGULAR DUCT ELBOWS.
6. DUCT SIZES AND ALL OPENINGS THROUGH BUILDING CONSTRUCTION SHALL SUIT EQUIPMENT FURNISHED.
7. COORDINATE DIFFUSER, GRILLE AND REGISTER LOCATIONS WITH ARCHITECTURAL REFLECTED CEILING PLANS AND EQUIPMENT OF ALL TRADES.
8. LOCATE THERMOSTATS, TEMPERATURE SENSORS, HUMIDISTATS, AND HUMIDITY SENSORS AT 48" ABOVE FINISHED FLOOR UNLESS NOTED OTHERWISE. COORDINATE LOCATIONS WITH OTHER EQUIPMENT, FURNITURE, AND DOOR SWINGS.
9. ALL EQUIPMENT, DUCTWORK, ETC., SHALL BE SUPPORTED AS DETAILED AND/OR SPECIFIED. PROVIDE ADDITIONAL SUPPORTS AS REQUIRED TO PROVIDE A VIBRATION-FREE, RIGID INSTALLATION.
10. ALL DUCT SIZES SHOWN ARE INSIDE CLEAR DIMENSIONS.
11. DAMPERS AND INSIDES OF DUCTS VISIBLE THROUGH GRILLES, REGISTERS AND DIFFUSERS SHALL BE PAINTED FLAT BLACK.
12. REFER TO TYPICAL DETAILS FOR PIPING AND INSTALLATION OF EQUIPMENT.
13. ACCESS PANELS IN DUCTWORK AND CEILINGS SHALL BE PROVIDED WHERE REQUIRED FOR OPERATION, BALANCING OR MAINTENANCE OF ALL MECHANICAL EQUIPMENT.
14. ALL DUCTWORK AND PIPING IS SHOWN SCHEMATICALLY. PROVIDE ALL TRANSITIONS, TURNING VANES, ELBOWS, FITTINGS, ETC., TO ALLOW SMOOTH FLOWS. ALL SPLIT DUCT FITTINGS SHALL TRANSITION TO FULL SIZE OF THE SUM OF BOTH BRANCHES, UPSTREAM OF SPLIT.
15. VERIFY FINISH WITH ARCHITECT PRIOR TO PURCHASING GRILLES, REGISTERS, DIFFUSERS, LOUVERS AND OTHER AIR DISTRIBUTION DEVICES.
16. PROVIDE FLEXIBLE DUCT CONNECTIONS ON ALL DUCTWORK CONNECTING TO EACH FAN, AIR HANDLING UNITS, AND FAN COIL UNITS.
17. PROVIDE TRANSITIONS AT DIFFUSER NECKS AS REQUIRED TO MATCH SIZES OF FLEX DUCTS TO BE CONNECTED.
18. INTERRUPTIONS TO EXISTING SERVICES SHALL BE SCHEDULED FOR TIMES OTHER THAN NORMAL OPERATING HOURS (SUCH AS NIGHTS AND WEEKENDS). SUCH INTERRUPTIONS TO SERVICES SHALL NOT BE MADE WITHOUT THE PRIOR WRITTEN CONSENT OF THE OWNER'S REPRESENTATIVE AND PROPER COORDINATION WITH OTHER TRADES. PRE-WORK SHALL BE PERFORMED TO MAKE THE SHUTDOWN PERIOD AS BRIEF AS POSSIBLE.
19. ALL EQUIPMENT, DUCTWORK, ETC., TO BE REMOVED SHALL REMAIN PROPERTY OF THE OWNER OR DISPOSED OF LEGALLY, AS DIRECTED BY OWNER.
20. MAINTAIN CLEARANCE OF A MINIMUM OF 6" BETWEEN DUCTWORK, PIPING, EQUIPMENT, ETC., AND ALL FIRE RATED AND FIRE/SMOKE RATED PARTITIONS, TO ALLOW FOR INSPECTIONS OF RATED WALLS.
21. DUCT RUNOUTS TO DIFFUSERS SHALL MATCH THE SIZE OF THE DIFFUSER NECK.
22. WATER PRESSURE DROPS THROUGH COIL CONTROL VALVES SHALL NOT EXCEED 5 PSI.
23. UNLESS OTHERWISE NOTED, ALL EQUIPMENT AND VALVE DRAINS SHALL BE INDEPENDENTLY PIPED FULL SIZE TO THE NEAREST PLUMBING DRAIN.
24. SLEEVE AND SEAL ALL PIPING PENETRATIONS THROUGH BUILDING PARTITIONS. PROVIDE MANUAL AIR VENTS AT ALL HIGH POINTS IN CHILLED WATER AND HOT WATER PIPING.
25. PIPING, DUCTWORK, LEAK PROTECTION APPARATUS, OR OTHER EQUIPMENT FOREIGN TO ELECTRICAL SWITCHBOARDS, PANELBOARDS, DISTRIBUTION BOARDS, OR MOTOR CONTROL CENTERS SHALL NOT BE INSTALLED WITHIN THE REQUIRED SPACE FOR WORKING CLEARANCES OR DEDICATED SPACES OF THE ELECTRICAL EQUIPMENT, EXTENDING IN FRONT OF AND FROM FLOOR TO STRUCTURAL CEILING WITH A WIDTH AND DEPTH OF THE ELECTRICAL EQUIPMENT IN ACCORDANCE WITH NEC-110.26.

HVAC EQUIPMENT TAGS

A 200 — TAG (A), CFM (200) — AIR DISTRIBUTION DEVICE

VVT-18.1 — ASSOCIATED AHU (18), TERMINAL BOX NUMBER (1) — VARIABLE VOLUME TERMINAL BOX

HVAC DRAWING INDEX

SHEET	DESCRIPTION	ISSUED
M0.01	SYMBOLS, LEGEND, SCHEDULES, SPECS & INDEX - HVAC	YES
M1.01	PARTIAL FOURTH FLOOR DEMOLITION PLAN - HVAC	YES
M2.01	PARTIAL FOURTH FLOOR NEW WORK PLAN - HVAC	YES
M2.02	PARTIAL FIFTH FLOOR AND ROOF NEW WORK PLAN - HVAC	YES
M3.01	DETAILS AND CONTROLS - HVAC	YES

NEW AIR DISTRIBUTION SCHEDULE

MARK	CFM	NECK SIZE	FACE SIZE LENGTH	DESCRIPTION
A	000-280 281-430	8ø 10ø	24x24 24x24	SUPPLY DIFFUSER BASIS OF DESIGN: PRICE ASCD (4C) COLOR: WHITE MATERIAL: ALUMINUM OPPOSED BLADE DAMPERS: NO BACK PAN SIZE: 18x18
B	000-280 -	8ø -	24x24 24x24	RETURN / EXHAUST GRILLE BASIS OF DESIGN: PRICE 80 COLOR: WHITE MATERIAL: ALUMINUM OPPOSED BLADE DAMPERS: NO BACK PAN SIZE: 18x18 GRID SIZE: ½"x½"x½"

NOTES:
1. AIR DISTRIBUTION DEVICES LOCATED WITHIN ACOUSTICAL TILE CEILINGS SHALL BE PROVIDED WITH BORDER TYPE 3 FOR LAY-IN MOUNTING. AIR DISTRIBUTION DEVICES LOCATED WITHIN GYPSUM BOARD CEILINGS OR WALLS SHALL BE PROVIDED WITH BORDER TYPE 1 FOR SURFACE MOUNTING. REFER TO ARCHITECTURAL DOCUMENTS FOR CEILING TYPES.
2. AIR DISTRIBUTION DEVICES LOCATED IN SMALL ROOMS WHERE FULL 24"x24" GRID ARE NOT AVAILABLE SHALL BE PROVIDED WITH SURFACE MOUNTING BORDERS IN LIEU OF LAY-IN. SECURE EACH DEVICE TO CEILING GRID WITH FIELD-FABRICATED SUPPORTS.

EXISTING AIR HANDLING UNIT SCHEDULE

PLAN MARK	NEW AIR FLOWS SUPPLY CFM	NEW AIR FLOWS OUTDOOR CFM	EXISTING AIR FLOWS SUPPLY CFM	EXISTING AIR FLOWS OUTDOOR CFM	FAN DATA TYPE	ESP IN. WG.	FAN RPM	MOTOR HP	VOLTS / PHASE	COOLING COIL DESIGN CONDITIONS EAT DB	EAT WB	LAT DB	LAT WB	WATER DATA TEMP. °F ENT.	LVG.	FLOW GPM
AHU-18	23905	4500	23905	4500	CENTRIFUGAL	2.5	1215	40	480/3	78.5	65.9	51.5	51.2	43	57	132

NEW EXHAUST FAN SCHEDULE

PLAN MARK	MODEL	AIRFLOW (CFM)	CAPACITY (CFM)	TYPE	ESP IN. WG.	FAN RPM	MOTOR RPM	MOTOR HP	VOLTS / PHASE
EF-1	60 ACEB	75	225	CENTRIFUGAL	0.5	1365	1725	1/4	120/1

NOTES:
1. MODEL NUMBERS AND SELECTIONS BASED ON COOK.
2. PROVIDE VFD FOR FUTURE AIRFLOW ACCOMMODATIONS.

COMPUTER ROOM UNIT SCHEDULE

PLAN MARK	COOLING CAPACITY TOTAL MBH	INDOOR UNIT (CRU-1) MODEL NUMBER	INDOOR UNIT SUPPLY CFM	OUTDOOR UNIT (CU-1) MODEL NUMBER	COMP. RLA	COMP. LRA	REFRIGERANT	EFF. SEER	ELECTRICAL DATA MCA	MOCP	VOLT/ PHASE
CRU-1/CU-1	27	30QNC030	730	38HDF030	14.1	73.0	R-410A	13	18.4	30	208/1
CRU-2/CU-2	27	30QNC030	730	38HDF030	14.1	73.0	R-410A	13	18.4	30	208/1

NOTES:
1. MODEL NUMBERS AND SELECTIONS BASED ON CARRIER.
2. PROVIDE SINGLE-POINT POWER KIT. TIE IN COMMON HIGH DRAIN PAN/UNIT SHUTDOWN ALARM TO BAS.
3. PROVIDE LOW-AMBIENT TEMP KIT.

TLC ENGINEERING FOR ARCHITECTURE
1650 Prudential Drive
Suite 200
Jacksonville, Florida 32207
Phone: 904-306-9111
Fax: 904-306-9117
www.tlc-engineers.com
© Copyright 2011 TLC Engineering for Architecture, Inc.
COA 15 TLC NO: 812082
DRAWN BY: RSL CHECKED BY: RSL
APPROVED BY: RSL

G S & P ®
Design Services For The Built Environment
Atlanta
Birmingham
Charlotte
Cincinnati
Columbus
Dallas
Fort Lauderdale
Knoxville
Jackson
Jacksonville
Louisville
Memphis
Nashville
Richmond
Tampa
GRESHAM SMITH AND PARTNERS
5220 Belfort Road
Suite 100
Jacksonville, FL 32256
904.332.6699
FIRM'S FLORIDA CERT. NO. AAP000034/EB0003806 IB26000797

FLAGLER HOSPITAL
Excellence As A Way Of Life

IS PHASE II

CONSTRUCTION DOCUMENTS

SEAL:
Ryan Lime, P.E.
Florida License #73849

REVISION

No.	Date	Revision

SYMBOLS, LEGEND, SCHEDULES, SPECS & INDEX - HVAC

M0.01

PROJECT: 27432.00
DATE: AUG 31, 2012

L:\2012-Jobs\812082-Flagler Hsp MOB IS Exp\CAD-MEP\Sheets M0.01.dwg 8/31/2012 4:18:03 PM ryan.lime

TLC ENGINEERING FOR ARCHITECTURE
1650 Prudential Drive
Suite 200
Jacksonville, Florida 32207
Phone: 904-306-9111
Fax: 904-306-9117
www.tlc-engineers.com
© Copyright 2011 TLC Engineering for Architecture, Inc.

COA 15 TLC NO:812082
DRAWN BY: HKN CHECKED BY: RL
APPROVED BY: BDR

G S & P

Design Services For The Built Environment

Atlanta
Birmingham
Charlotte
Cincinnati
Columbus
Dallas
Fort Lauderdale
Knoxville
Jackson
Jacksonville
Louisville
Memphis
Nashville
Richmond
Tampa

GRESHAM SMITH AND PARTNERS
5220 Belfort Road
Suite 100
Jacksonville, FL 32256
904.332.6699
FIRM'S FLORIDA CERT. NO.
AAP000034/EB0003806
IB26000797

FLAGLER HOSPITAL
Excellence As A Way Of Life

IS PHASE II

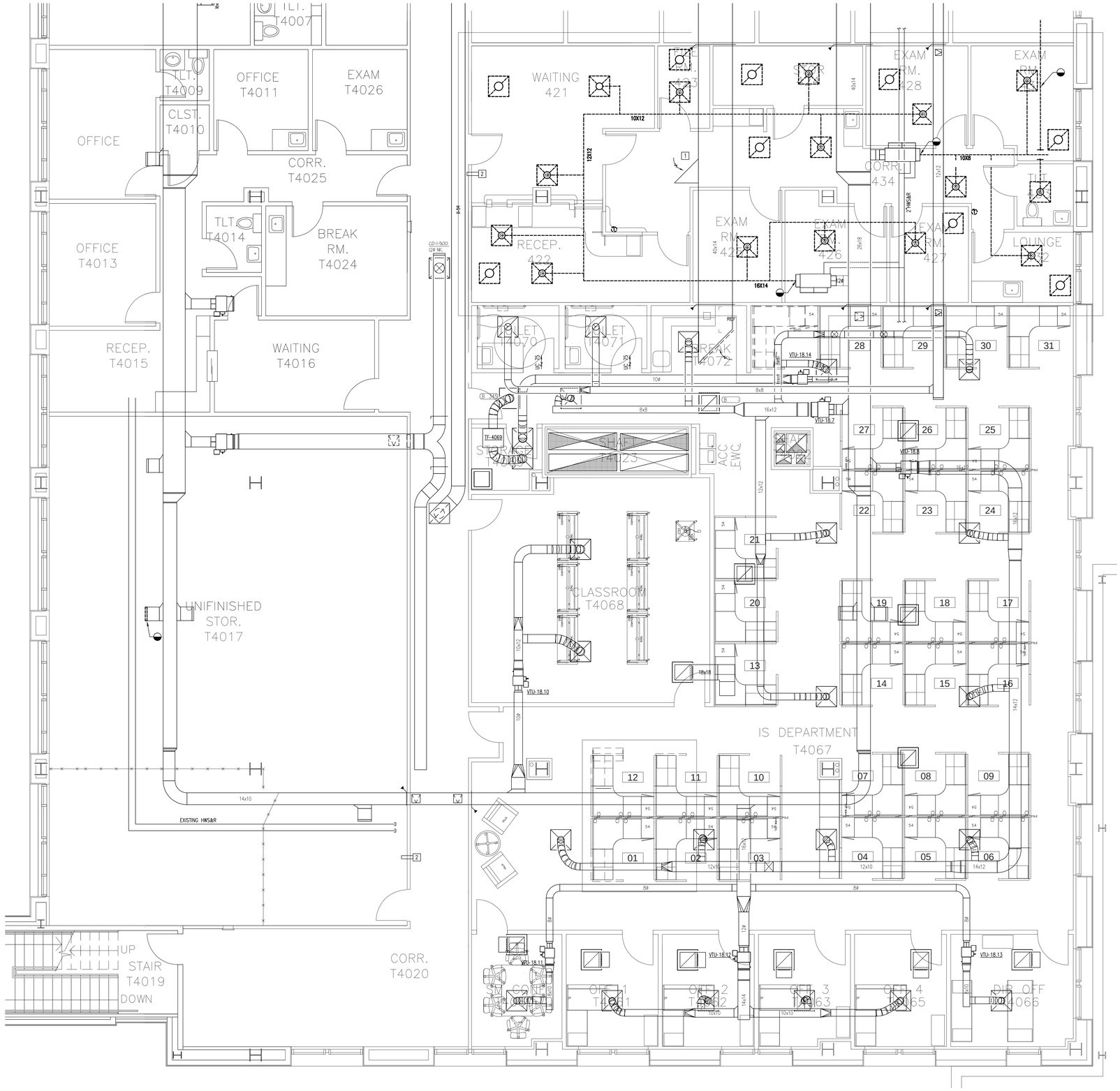

GENERAL NOTES

1. ALL WORK IN ADJACENT AREAS TO BE DONE DURING NIGHTS AND WEEKENDS. CONTRACTOR TO COORDINATE WITH OWNER PRIOR TO COMMENCEMENT OF WORK.
2. CONTRACTOR TO PROVIDE NECESSARY EGRESS REQUIRED WHEN ANY WORK IN CORRIDOR IS CONDUCTED DURING WORKING HOURS.
3. ENSURE ALL EXISTING FIRE DAMPERS ARE IN GOOD WORKING CONDITION. REPLACE OR ADD DAMPER IF MISSING OR NOT FUNCTIONING.
4. DEMOLISH AND REMOVE ALL SUPPLY DIFFUSERS W/ RUN OUTS AND RETURN GRILLES IN PROJECT AREA.
5. RELOCATE ALL EXISTING THERMOSTATS PER NEW WORK PLAN.

DEMOLITION KEYED NOTES

1. SEAL/COVER RETURN AIR MAIN DUCTWORK OPENING WITH NEW MERV 8 FILTER DURING CONSTRUCTION. TYPICAL OF ALL RETURN AIR TRANSFERS.
2. PROVIDE PRESSURE GAUGE TO MONITOR THE PRESSURE RELATIONSHIP BETWEEN THE CONSTRUCTION AREA AND THE ADJACENT SPACES. LOCATE PRESSURE GAUGE AT ENTRANCE TO CONSTRUCTION AREA. REFER TO ARCHITECTURAL DRAWINGS FOR LOCATION OF CONSTRUCTION BARRIERS.

PARTIAL FOURTH FLOOR DEMOLITION PLAN – HVAC

SCALE: 1/4" = 1'-0"

CONSTRUCTION DOCUMENTS

SEAL:
Ryan Lime, P.E.
Florida License #73849

REVISION

No. -	Date -	Revision

PARTIAL FOURTH FLOOR DEMOLITION PLAN - HVAC

M1.01

PROJECT:27432.00
DATE: AUG 31, 2012

L:\2012-Jobs\812082-Flagler Hsp MOB IS Exp\CAD-MEP\Sheets M1.01.dwg 8/31/2012 4:18:21 PM ryan.lime

TLC ENGINEERING FOR ARCHITECTURE
1650 Prudential Drive
Suite 200
Jacksonville, Florida 32207
Phone: 904-306-9111
Fax: 904-306-9117
www.tlc-engineers.com
© Copyright 2011 TLC Engineering for Architecture, Inc.

COA 15 TLC NO:812082
DRAWN BY: HKN CHECKED BY: RL
APPROVED BY: BDR

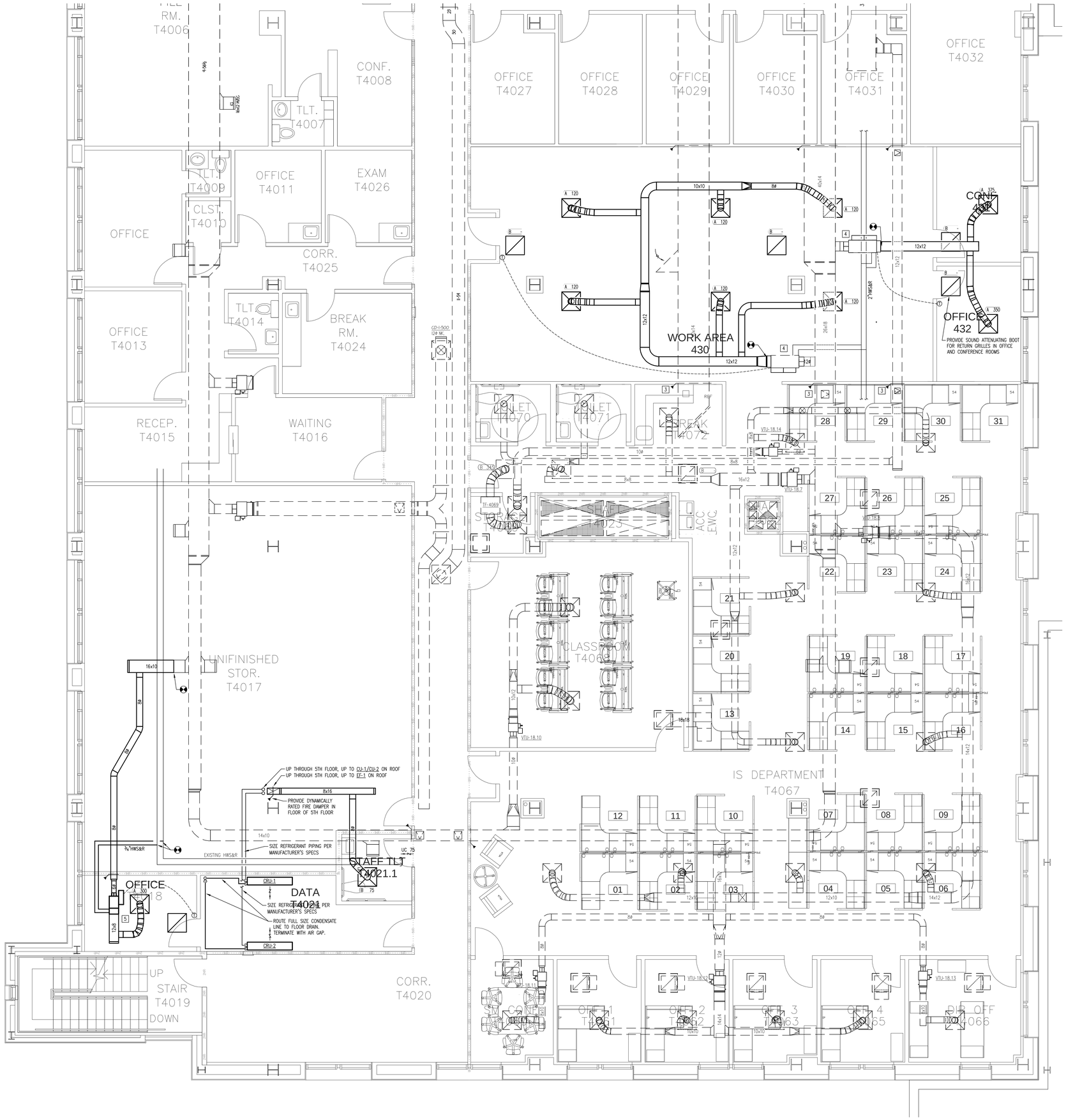

PARTIAL FOURTH FLOOR NEW WORK PLAN – MECHANICAL

SCALE: 1/4" = 1'-0"

GENERAL NOTES

1. ALL WORK IN ADJACENT AREAS TO BE DONE DURING NIGHTS AND WEEKENDS. CONTRACTOR TO COORDINATE WITH OWNER PRIOR TO COMMENCEMENT OF WORK.
2. CONTRACTOR TO PROVIDE NECESSARY EGRESS REQUIRED WHEN ANY WORK IN CORRIDOR IS CONDUCTED DURING WORKING HOURS.
3. ENSURE ALL EXISTING FIRE DAMPERS ARE IN GOOD WORKING CONDITION. REPLACE OR ADD DAMPER IF MISSING OR NOT FUNCTIONING.
4. RELOCATE ALL EXISTING THERMOSTATS PER NEW WORK PLAN.

KEYED NOTES

[1] SEAL/COVER RETURN AIR MAIN DUCTWORK OPENING WITH NEW MERV 8 FILTER DURING CONSTRUCTION. TYPICAL OF ALL RETURN AIR TRANSFERS.

[2] PROVIDE PRESSURE GAUGE TO MONITOR THE PRESSURE RELATIONSHIP BETWEEN THE CONSTRUCTION AREA AND THE ADJACENT SPACES. LOCATE PRESSURE GAUGE AT ENTRANCE TO CONSTRUCTION AREA. REFER TO ARCHITECTURAL DRAWINGS FOR LOCATION OF CONSTRUCTION BARRIERS.

[3] BECAUSE WALL IS NO LONGER FIRE RATED, FIRE DAMPER MUST BE DECOMMISSIONED. SCREW DAMPER OPEN AND VISIBLY MARK DUCT STATING FIRE DAMPER IS NO LONGER IN USE.

[4] REBALANCE TERMINAL UNIT FOR UPDATED MAXIMUM AND MINIMUM AIRFLOWS. MAXIMIZE AIRFLOW IS THE SUM OF THE CONNECTED SUPPLY DIFFUSERS. MINIMUM AIRFLOW SHALL BE 30% OF THE CALCULATED MAXIMUM.

[5] PROVIDE NEW 6" VARIABLE AIR VOLUME TERMINAL UNIT. SELECTION BASED ON ENVIRO-TEC SDR-WC WITH DIGITAL CONTROLS. UNIT CASING SHALL BE DOUBLE WALL INSULATED. BALANCE AS FOLLOWS: COOLING: 300 CFM MAX, 100 CFM MIN. HEATING: 100 CFM AND 0.25 GPM HOT WATER FLOW.

G S & P

Design Services For The Built Environment

Atlanta
Birmingham
Charlotte
Cincinnati
Columbus
Dallas
Fort Lauderdale
Knoxville
Jackson
Jacksonville
Louisville
Memphis
Nashville
Richmond
Tampa

GRESHAM SMITH AND PARTNERS
5220 Belfort Road
Suite 100
Jacksonville, FL 32256
904.332.6699
FIRM'S FLORIDA CERT. NO.
AAP000034/EB0003806
IB26000797

FLAGLER HOSPITAL
Excellence As A Way Of Life

IS PHASE II

CONSTRUCTION DOCUMENTS

SEAL:
Ryan Lime, P.E.
Florida License #73849

REVISION

No.	Date	Revision

PARTIAL FOURTH FLOOR NEW WORK PLAN - HVAC

M2.01

PROJECT:27432.00
DATE:AUG 31, 2012

L:\2012-Jobs\812082-Flagler Hsp MOB IS Exp\CAD-MEP\Sheets M2.01.dwg 8/31/2012 4:18:43 PM ryan.lime

TLC ENGINEERING FOR ARCHITECTURE
1650 Prudential Drive
Suite 200
Jacksonville, Florida 32207
Phone: 904-306-9111
Fax: 904-306-9117
www.tlc-engineers.com
© Copyright 2011 TLC Engineering for Architecture, Inc.

COA 15 TLC NO:812082
DRAWN BY: RSL CHECKED BY: RSL
APPROVED BY: RSL

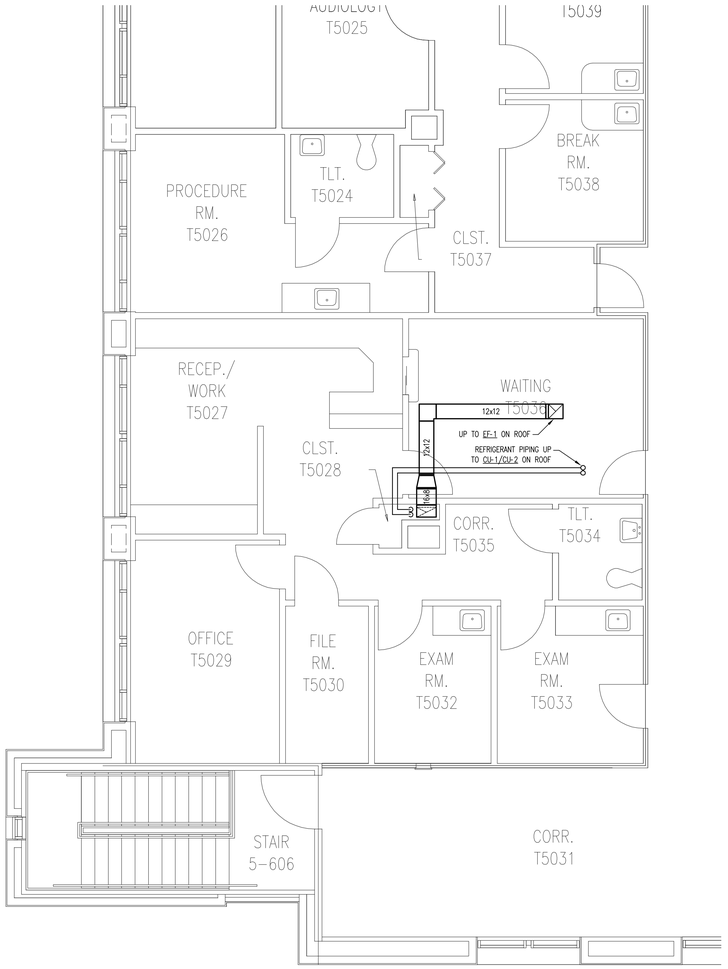

PARTIAL FIFTH FLOOR NEW WORK PLAN – HVAC
SCALE: 1/4" = 1'-0"

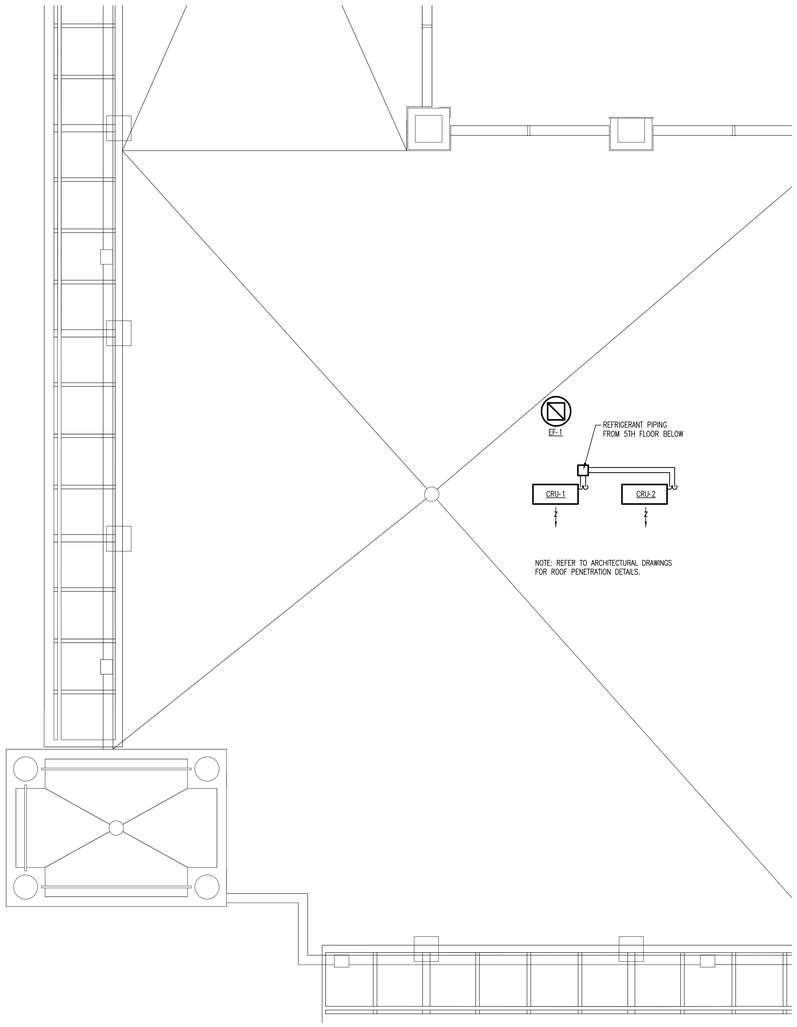

PARTIAL ROOF NEW WORK PLAN – HVAC
SCALE: 1/4" = 1'-0"

G S & P
Design Services For The Built Environment
Atlanta
Birmingham
Charlotte
Cincinnati
Columbus
Dallas
Fort Lauderdale
Knoxville
Jackson
Jacksonville
Louisville
Memphis
Nashville
Richmond
Tampa
GRESHAM SMITH AND PARTNERS
5220 Belfort Road
Suite 100
Jacksonville, FL 32256
904.332.6699
FIRM'S FLORIDA CERT. NO.
AAP000034/EB0003806
IB26000797

FLAGLER HOSPITAL
Excellence As A Way Of Life

IS PHASE II

CONSTRUCTION DOCUMENTS

SEAL:
Ryan Lime, P.E.
Florida License #73849

REVISION

No.	Date	Revision

PARTIAL FIFTH FLOOR AND ROOF NEW WORK PLAN - HVAC

M2.02

PROJECT:27432.00
DATE: AUG 31, 2012

L:\2012-Jobs\812082-Flagler Hsp MOB IS Exp\CAD-MEP\Sheets M2.02.dwg 8/31/2012 4:18:55 PM ryan.lime

TLC ENGINEERING FOR ARCHITECTURE
1650 Prudential Drive
Suite 200
Jacksonville, Florida 32207
Phone: 904-306-9111
Fax: 904-306-9117
www.tlc-engineers.com
© Copyright 2011 TLC Engineering for Architecture, Inc.
COA 15 TLC NO:812082
DRAWN BY: HKN CHECKED BY: RL
APPROVED BY: RL

G S & P
Design Services For The Built Environment
Atlanta
Birmingham
Charlotte
Cincinnati
Columbus
Dallas
Fort Lauderdale
Knoxville
Jackson
Jacksonville
Louisville
Memphis
Nashville
Richmond
Tampa
GRESHAM SMITH AND PARTNERS
5220 Belfort Road
Suite 100
Jacksonville, FL 32256
904.332.6699
FIRM'S FLORIDA CERT. NO. AAP000034/EB0003806 IB26000797

FLAGLER HOSPITAL
Excellence As A Way Of Life

IS PHASE II

CONSTRUCTION DOCUMENTS

SEAL:
Ryan Lime, P.E.
Florida License #73849

REVISION

No.	Date	Revision

DETAILS AND CONTROLS - MECHANICAL

M3.01

PROJECT:27432.00
DATE: AUG 31, 2012

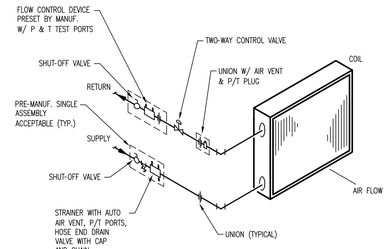

NOTES:
1. PROVIDE 4"ø OF STRAIGHT PIPE ON BOTH SIDES OF BALANCING VALVE.
2. ALL COMPONENTS FULL LINE SIZE UNLESS NOTED OTHERWISE.
3. LOCATE UNIONS TO ALLOW FOR COIL PULL.

TERMINAL REHEAT 2-WAY COIL PIPING — 9
No Scale

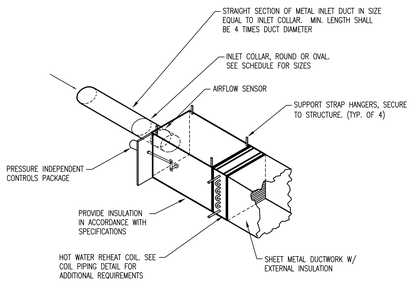

VARIABLE VOLUME TERMINAL W/HOT WATER HEAT — 10
No Scale

SINGLE VANE SCHEDULE			
	R (RADIUS)	SP	GAUGE
SMALL	2" (51 mm)	1½" (38 mm)	24 (0.70 mm)
LARGE	4½" (114 mm)	3¼" (83 mm)	22 (0.85 mm)

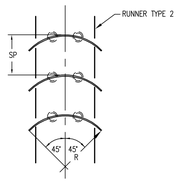

Single Vane

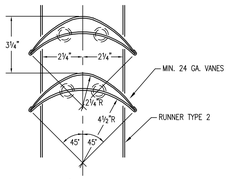

Large

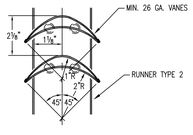

Small

Double Vane

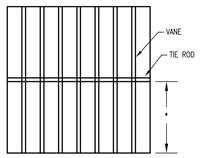

* MAXIMUM UNSUPPORTED VANE LENGTH

SMALL SINGLE VANE	36"
LARGE SINGLE VANE	36"
SMALL DOUBLE VANE	48"
LARGE DOUBLE VANE	72"

NOTE:
INSTALL VANES IN SECTIONS OR USE TIE RODS TO LIMIT THE UNBRACED VANE LENGTH.

NOTES:
1. VANES SHALL BE SECURELY FASTENED TO RUNNERS.
2. ALL VANES SHALL BE SECURE AND STABLE IN INSTALLED OPERATING POSITION.

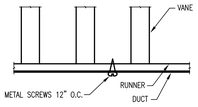

Vane Support

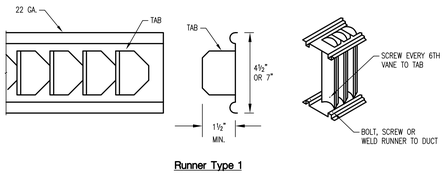

Runner Type 1

NOTE:
SEE MECHANICAL SPECIFICATIONS FOR ADDITIONAL INFORMATION.

TURNING VANES — 7
No Scale

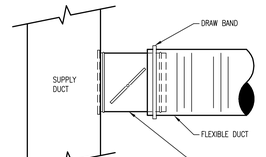

TYPICAL FLEX DUCT CONNECTION — 4
No Scale

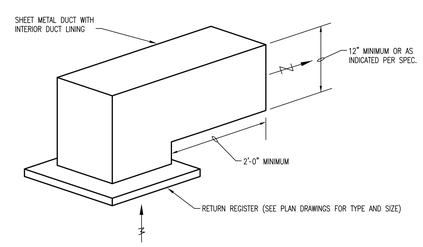

TYPICAL RETURN AIR BOOT — 5
No Scale

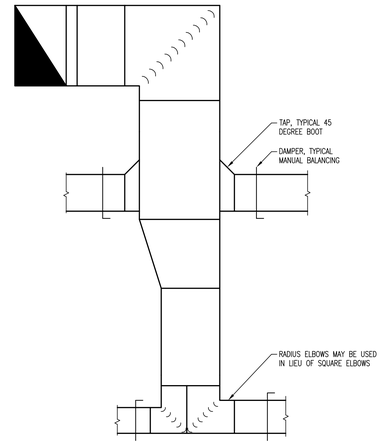

TYPICAL LOW PRESSURE DUCTWORK — 1
No Scale

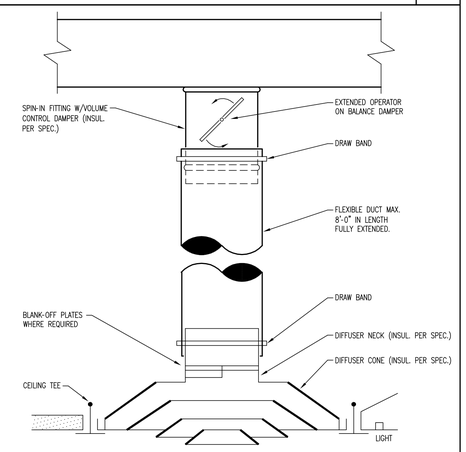

DIFFUSER MOUNTING — 2
No Scale

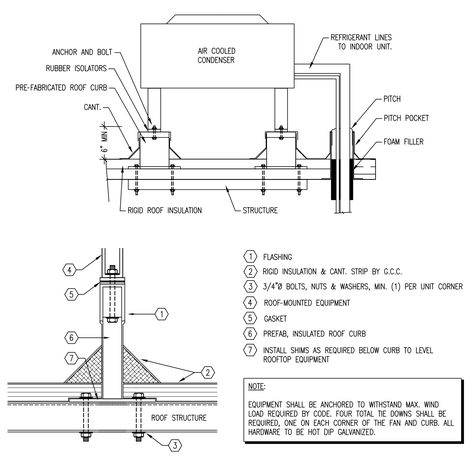

1. FLASHING
2. RIGID INSULATION & CANT. STRIP BY C.C.C.
3. 3/4"ø BOLTS, NUTS & WASHERS, MIN. (1) PER UNIT CORNER
4. ROOF-MOUNTED EQUIPMENT
5. GASKET
6. PREFAB, INSULATED ROOF CURB
7. INSTALL SHIMS AS REQUIRED BELOW CURB TO LEVEL ROOFTOP EQUIPMENT

NOTE:
EQUIPMENT SHALL BE ANCHORED TO WITHSTAND MAX. WIND LOAD REQUIRED BY CODE. FOUR TOTAL TIE DOWNS SHALL BE REQUIRED, ONE ON EACH CORNER OF THE FAN AND CURB. ALL HARDWARE TO BE HOT DIP GALVANIZED.

ANCHORED ROOF MOUNTED CONDENSER — 11
No Scale

NOTES:
1. CONTRACTOR SHALL COORDINATE WITH PROJECT STRUCTURAL ENGINEER AND PROVIDE THE PROPER QUANTITY AND SIZE OF TIE-DOWN ANCHORS TO SECURE ROOFTOP EQUIPMENT AGAINST WIND FORCE LOAD CRITERIA. MINIMUM OF TWO (2) ANCHOR TIE-DOWN CABLES PER ROOF MOUNTED PIECE OF EQUIPMENT.
2. ARRANGE CABLING AND LOCATE ANCHORS TO MAINTAIN MAINTENANCE ACCESS PANEL CLEARANCES.

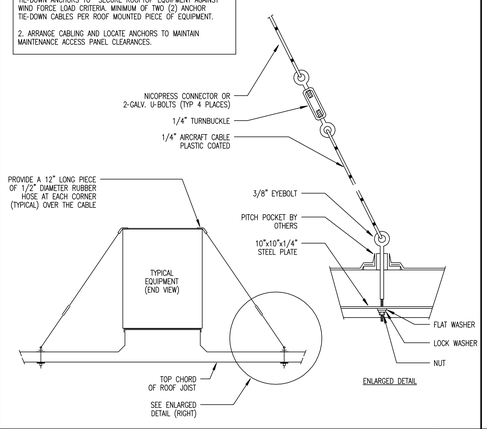

ROOFTOP EQUIPMENT TIE-DOWN — 8
No Scale

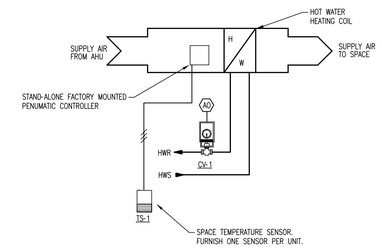

VARIABLE VOL TERMINAL W/HOT WATER REHEAT — 6
No Scale

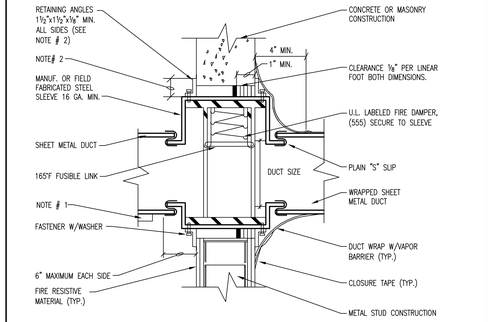

NOTES:
1. PROVIDE ACCESS DOOR & LABEL ON SIDE OR BOTTOM OF DUCT AS FOLLOWS:

DUCT WIDTH	DOOR SIZE
10" THRU 12"	8" x 8"
14" THRU 20"	12" x 12"
22" AND ABOVE	18" x 18"

2. 1½"x1½"x⅛" RETAINING ANGLES SHALL LAP STRUCTURAL OPENING 1" MIN. & COVER CORNERS OF OPENINGS. ANGLES ATTACH TO SLEEVE ONLY AND MUST NOT BE ATTACHED TO EACH OTHER AT CORNERS OR TO WALL.
3. ALL ATTACHMENTS PER MANUFACTURER'S APPROVED INSTALLATION INSTRUCTION.
4. VERTICAL POSITION SHOWN. HORIZONTAL INSTALLATION SIMILAR. DAMPER TO BE SPRING LOADED WHEN HORIZONTAL.

FIRE DAMPER INSTALLATION — 3
No Scale

L:\2012-Jobs\812082-Flagler Hsp MOB IS Exp\CAD-MEP\Sheets M3.01.dwg 8/31/2012 4:19:05 PM ryan.lime

PLUMBING SYMBOL LEGEND

CD	– CONDENSATE DRAIN	CD	– ABOVE GROUND CONDENSATE DRAIN
CO	– CLEANOUT	CD	– BELOW GROUND CONDENSATE DRAIN
CONT	– CONTINUATION		– DOMESTIC COLD WATER
CW	– DOMESTIC COLD WATER		– DOMESTIC HOT WATER
DN	– DOWN		– DOMESTIC HOT WATER RECIRCULATING
EXIST	– EXISTING	S	– ABOVE GROUND SANITARY
HW	– DOMESTIC HOT WATER	S	– BELOW GROUND SANITARY
IE	– INVERT ELEVATION		– SANITARY VENT
RBBP	– REDUCED PRESSURE BACKFLOW PREVENTER	ST	– ABOVE GROUND STORM
SAN	– SANITARY	ST	– BELOW GROUND STORM
SF	– SQUARE FEET	STO	– OVERFLOW STORM DRAIN
ST	– STORM	STO	– BELOW GROUND OVERFLOW STORM
STO	– OVERFLOW STORM DRAIN		– HOSE BIBB OR WALL HYDRANT
VTR	– VENT THRU ROOF	CO	– CLEAN OUT PLUG
		CO	– FLOOR CLEAN OUT
		FD FD	– FLOOR DRAIN
			– ROOF DRAIN
		FS	– FLOOR SINK
			– CONNECT TO EXISTING
			– GATE VALVE
			– BALL VALVE
			– CHECK VALVE(SWING)
			– REDUCED PRESSURE BACKFLOW PREVENTOR
			– RELIEF OR SAFETY VALVE
			– DIRECTION OF FLOW
			– ELBOW, TURNED DOWN
			– ELBOW, TURNED UP

NOTE: SOME SYMBOLS SHOWN ON THIS LEGEND MAY NOT PERTAIN TO THIS PROJECT.

PLUMBING FIXTURE SPECIFICATIONS

(WC-1) FLOOR MOUNTED ACCESSIBLE WATER CLOSET

17" HIGH, VITREOUS CHINA, 1.6 GALLON, FLOOR MOUNTED TANK WATER CLOSET, PRESSURE ASSISTED SIPHON JET.

SEAT SHALL BE EXTRA HEAVY SOLID PLASTIC WITH STAINLESS STEEL SELF SUSTAINING CHECK HINGE, OPEN FRONT LESS COVER.

1/2" COMPRESSION X 1/2" OD CHROME PLATED ANGLE SUPPLY STOP WITH CHROME PLATED 12" FLEXIBLE RISER AND ESCUTCHEON.

NOTE: FLUSH HANDLE SHALL FACE WIDE SIDE OF STALL OR ROOM.

BASIS OF DESIGN

CHINA - AMERICAN STANDARD - 2998.012
SEAT - BEMIS - 1655-SS/C
SUPPLY - MCGUIRE - H2169

(L-1) ACCESSIBLE WALL HUNG LAVATORY

VITREOUS CHINA LAVATORY, 20" X 18", PUNCHED FOR SINGLE HOLE FITTING AND CONCEALED ARM CARRIER SUPPORT.

SENSOR FAUCET(BATTERY OPERATED), 4" CENTERSET BRASS FAUCET, VANDAL RESISTANT 0.5 GPM FLOW REGULATOR. PROVIDE WITH HW & CW BACK CHECKS AND ASSE 1070 COMPLIANT THERMOSTATIC MIXING VALVE WHEN FAUCET IS PROVIDED WITH BOTH HW & CW.

PRE-INSULATED CHROME PLATED WHEELCHAIR LAVATORY STRAINER, CAST GRID DRAIN PLUG WITH STRAINER AND OFFSET DRAIN ASSEMBLY WITH 1-1/4 INCH O.D. TAILPIECE, CHROME PLATED 17 GAUGE 1-1/4 X 1-1/2" BRASS P-TRAP WITH CLEANOUT.

PRE-INSULATED 1/2" COMPRESSION X 3/8 INCH COMPRESSION CHROME PLATED ANGLE SUPPLY STOPS WITH CHROME PLATED 12" FLEXIBLE RISERS AND ESCUTCHEONS.

FULLY ADJUSTABLE LAVATORY CARRIER ADJUSTED TO ACCESSIBLE HEIGHT, SEE SPECS.

BASIS OF DESIGN

CHINA - AMERICAN STANDARD - 0.356.012
FAUCET - CHICAGO - 680-4
STRAINER/TRAP/STOPS - MCGUIRE - 2125WC
CARRIER - ZURN ZR-1200 SERIES

(FD-1) FLOOR DRAIN

COATED CAST IRON BODY WITH BOTTOM OUTLET, COMBINATION INVERTIBLE MEMBRANE CLAMP AND ADJUSTABLE TYPE "B" NICKEL BRONZE STRAINER, 6" SQUARE TOP, TAPPED FOR TRAP PRIMER CONNECTION, VANDAL PROOF.

BASIS OF DESIGN

ZURN - Z-415-P-VP

(TP-1) AUTOMATIC TRAP PRIMER VALVE

MACHINED OF CORROSION RESISTANT BRASS SHALL NOT CONTAIN SPRINGS OR DIAPHRAMS, "O" RING SEALS TESTED FOR RELIABILITY BETWEEN -40 TO 4500 F. INLET OPENING SHALL BE 1/2-INCH MALE NPT, OUTLET SHALL BE 1/2-INCH FEMALE NPT.

TRAP PRIMER OPERATES VIA LINE PRESSURE DROP AND DOES NOT NEED TO BE PLACED NEAR A FIXTURE.

BASIS OF DESIGN

PRECISION PLUMBING PRODUCTS

(HD-1) HUB DRAIN

COATED CAST IRON BODY WITH BOTTOM OUTLET, COMBINATION INVERTIBLE MEMBRANE CLAMP AND ADJUSTABLE COLLAR WITH 6" ROUND STRAINER, DEEP SEAL TRAP, 4" DIAMETER FUNNEL.

BASIS OF DESIGN

ZURN - Z-415 TYPE "E" STRAINER

PLUMBING SPECIFICATIONS

1.00 - GENERAL PROVISIONS

1.1 PROVIDE ALL LABOR, MATERIAL AND EQUIPMENT FOR A COMPLETE AND PROPERLY OPERATING PLUMBING SYSTEM.

1.2 CODES AND STANDARDS: ALL PLUMBING WORK SHALL BE IN STRICT COMPLIANCE WITH THE STANDARD PLUMBING CODE AND ALL LOCAL CODES HAVING JURISDICTION.

1.3 ALL PLUMBING WORK SHALL BE DONE IN A NEAT AND WORKMANLIKE MANNER.

1.4 CONTRACTOR SHALL SECURE AND PAY FOR ALL PERMITS AND FEES, ETC., REQUIRED FOR THE EXECUTION OF THIS WORK.

1.5 CONTRACTOR SHALL COORDINATE HIS WORK WITH ALL OTHER TRADES BEFORE FABRICATION OR INSTALLATION. OFFSETS AND/OR TRANSITIONS REQUIRED SHALL BE PROVIDED WITHOUT ADDITIONAL COST. CONTRACTOR SHALL COORDINATE AND INSTALL HIS WORK IN A TIMELY MANNER TO PREVENT DELAYS IN THE CONSTRUCTION.

1.6 CONTRACTOR SHALL BE RESPONSIBLE TO REPAIR OR REPLACE DAMAGED EQUIPMENT AND/OR MATERIAL.

1.7 PROVIDE ALL MATERIALS REQUIRED TO PROPERLY SUPPORT ALL PIPING AND EQUIPMENT. PIPE HANGERS SHALL BE ADJUSTABLE TYPE AND BE SPACED IN ACCORDANCE WITH THE STANDARD PLUMBING CODE. PROVIDED PLASTIC COATED RING ON HANGERS FOR COPPER PIPING TO PROVIDE DIELECTRIC ISOLATION.

1.8 PROVIDE DIELECTRIC UNIONS OR FLANGES BETWEEN COPPER AND STEEL PIPING AND BETWEEN BRASSWARE AND STEEL. DO NOT USE STEEL AND COPPER PIPING IN THE SAME SYSTEM WITHOUT SUCH ISOLATION.

1.9 PROVIDE REDUCING FITTINGS (REDUCING BUSHINGS SHALL NOT BE USED) WHERE CHANGES IN PIPE SIZES OCCUR.

1.10 THIS CONTRACTOR SHALL SUPPLY AND INSTALL ALL SERVICES THROUGHOUT THE BUILDING AND MAKE CONNECTION TO SITE UTILITIES APPROXIMATELY 5'-0" OUTSIDE THE BUILDING. CONTRACTOR SHALL SUPPLY AND INSTALL FIXTURES, FITTINGS, VALVING AND TRIM AND MAKE READY FOR USE ALL FIXTURES, EQUIPMENT, ETC.

1.11 SEE ARCHITECTURAL DRAWINGS FOR FIXTURE LOCATIONS AND MOUNTING HEIGHTS.

2.00 - BASIC MATERIALS AND METHODS

2.1 ABOVEGROUND WATER PIPE AND FITTINGS - TYPE "L" COPPER.

2.2 PROVIDE UNIONS OR FLANGES IN ALL DOMESTIC WATER SERVICE LINES AT EACH PIECE OF EQUIPMENT, SPECIALTY VALVES OR AT OTHER LOCATIONS REQUIRED FOR READY DISCONNECT.

2.3 WATER HAMMER ARRESTORS SHALL BE INSTALLED AT THE LOCATIONS ON THE PLANS AND IN ACCORDANCE WITH PDI STANDARD WH-201. PRODUCTS SHALL BE EQUAL TO THOSE MANUFACTURED BY PRECISION PLUMBING PRODUCTS OR SIOUX CHIEF.

2.4 VALVES: PROVIDE VALVES TO ISOLATE EACH RISER, BRANCH LINE AND PIECE OF EQUIPMENT.

2.5 PROVIDE PRESSURE REDUCING VALVE AND AIR GAP CONNECTION AT DISHWASHER AS REQUIRED BY CODE AND ACCORDING TO MANUFACTURER.

2.6 PROVIDE INLINE WATER FILTER AT COFFEE MAKER AND ICE MAKER TO REMOVE MATERIALS, TASTE AND ODOR - "EVERPURE OR "SYSTEMS IV".

2.7 ABOVEGROUND SANITARY WASTE, SANITARY VENT AND STORM PIPING - SERVICE WEIGHT CAST IRON WITH NO-HUB COUPLINGS - ("HUSKEY 4000" OR "CLAMPALL" ONLY).

2.8 ABOVEGROUND SANITARY WASTE ARMS - SERVICE WEIGHT CAST IRON WITH NO-HUB COUPLINGS OR DWV COPPER.

2.9 INSTALL GRAVITY LINES SLOPED AT 1/8" PER FOOT FOR PIPE 3" AND LARGER AND 1/4" PER FOOT FOR PIPE SMALLER THAT 3". VERIFY INVERT ELEVATION WITH SITE PIPING PRIOR TO ANY PIPE BEING INSTALLED.

3.00 - PLUMBING FIXTURES AND TRIM

3.1 ALL PLUMBING FIXTURES SHALL BE "FIRST QUALITY" AS DEFINED AND SET FORTH IN COMMERCIAL STANDARD CS77-28 AS PROMULGATED BY THE U.S. DEPARTMENT OF COMMERCE.

3.2 ALL FIXTURES ARE TO BE WHITE VITREOUS CHINA UNLESS OTHERWISE SPECIFICALLY NOTED.

3.3 FIXTURES AND FITTINGS PROPOSED SHALL BE FROM ONE MANUFACTURER AND OF SIMILAR CHARACTER IN ANY ROOM OR LOCATION. ESCUTCHEONS, HANDLES, ETC., ON THE DIFFERENT FIXTURES SHALL BE OF THE SAME DESIGN.

3.4 PROVIDE FIXTURE CARRIERS AS RECOMMENDED BY FIXTURE MANUFACTURER AND/OR CONSTRUCTION METHOD.

3.5 PROVIDE ACCESS PANELS TO ALL VALVES WITHIN CHASES OR ABOVE NON-ACCESSIBLE CEILINGS. REFER TO ARCHITECTURAL DRAWINGS FOR CEILING TYPES.

3.6 FLOOR DRAIN TRAP SEALS SHALL HAVE AN APPROVED AUTOMATIC PRIMING DEVICE DESIGNED FOR THAT PURPOSE.

3.7 ALL CONCEALED TRAPS, PRIMERS, VALVES, CLEANOUTS, ETC. LOCATED IN TILED AREAS SHALL BE PROVIDED WITH AN ACCESS PANEL.

4.00 - INSULATION

4.1 ABOVE GROUND HOT WATER - FIBERGLASS, 1" THICKNESS, ASJ JACKET, DOUBLE SEALING LAP JOINT, 0.24 K AT 75°F. INSULATION AND ADHESIVES INSTALLED IN RETURN AIR PLENUMS SHALL HAVE A MAXIMUM FLAME SPREAD RATING OF 25 AND A MAXIMUM SMOKE DEVELOPED RATING OF 50.

4.2 ABOVEGROUND CONDENSATE PIPING SHALL BE 1/2" FLEXIBLE UNICELLULAR POLYOLEFIN FOAM AND SHALL HAVE A MAXIMUM FLAME SPREAD RATING OF 25 AND A MAXIMUM SMOKE DEVELOPED RATING OF 50 - IMCOA "IMCOLOCK"

5.00 - VALVES AND COCKS

5.1 VALVES 2" AND SMALLER SHALL BE BALL VALVES, 150 PSI SWP, 400 PSI WOG. STANDARD PORT BALL, BRONZE TRIM, CAST BRONZE BODY, CHROMIUM-PLATED BRASS BALL, BRONZE NON-BLOWOUT STEM, TEFLON SEAT, DOUBLE O-RING STEM SEALS, ZINC-COATED STEEL HANDLE WITH PLASTIC COATED HAND GRIP, 90 DEGREE OPERATION FROM FULL OPEN TO TIGHT SHUT-OFF - STOCKHAM S214-BR-T-T, STOCKHAM S216-BR-T-S OR EQUAL.

5.2 CHECK VALVES, ROUGH BRASS, REGRINDING BRONZE DISC - STOCKHAM B-345; B-309 OR EQUAL.

6.00 - STERILIZATION

6.1 DOMESTIC WATER PIPING SHALL BE THOROUGHLY FLUSHED OUT AND STERILIZED IN ACCORDANCE WITH THE STANDARD PLUMBING CODE.

PLUMBING GENERAL NOTES

1. READ THE SPECIFICATIONS.
2. UTILITIES AND SERVICES INDICATED ARE TAKEN FROM VARIOUS OLD AND NEW SURVEYS, AS-BUILT RECORDS AND FIELD INVESTIGATIONS. UNFORSEEN CONDITIONS PROBABLY EXIST AND NEW WORK MAY NOT BE FIELD LOCATED EXACTLY AS SHOWN ON DRAWINGS. COOPERATION WITH OTHER TRADES IN ROUTING AND BURIAL DEPTHS, AS DETERMINED DURING CONSTRUCTION WILL BE NECESSARY.
3. FIELD VERIFY EXISTING INSTALLATIONS. MODIFY EXISTING PLUMBING SYSTEMS, WHICH ARE TO REMAIN ACTIVE, TO FACILITATE RECONNECTION AND EXTENSION OF THE NEW WORK.
4. NOTIFY OWNER AT LEAST 24 HOURS PRIOR TO INTERRUPTING EXISTING SERVICE. SCHEDULE DISCONNECTION AND TIE-INS TO MINIMIZE DISRUPTION OF SERVICES. SERVICES ARE NOT TO BE LEFT DISRUPTED DURING NON-NORMAL CONTRACTOR WORKING HOURS.
5. PIPE ROUTING SHOWN IS SCHEMATIC AND IS NOT INTENDED TO INDICATE EXACT ROUTING AND ANY ADDITIONAL OFFSETS AND FITTINGS REQUIRED FOR PROPER INSTALLATION AND TO MAINTAIN CLEARANCES. VERIFY STRUCTURAL, MECHANICAL AND ELECTRICAL INSTALLATIONS AND OTHER POTENTIAL OBSTRUCTIONS AND ROUTE PIPING TO AVOID INTERFERENCES.
6. PROVIDE ALL OFFSETS AND FITTINGS AND MAKE CONNECTION TO SITE UTILITIES.
7. CONCEAL PIPING ABOVE CEILINGS, WITHIN WALLS OR CHASES EXCEPT IN MECHANICAL ROOMS OR AS SPECIFICALLY NOTED. PROVIDE ACCESS PANELS FOR ALL VALVES CONCEALED IN WALLS OR ABOVE NON-ACCESSABLE CEILINGS.
8. SLEEVE AND FIRE STOP PENETRATIONS OF RATED WALLS, FLOORS, CEILINGS AND ROOFS. FLASH AND COUNTERFLASH ROOF PENETRATIONS.
9. SEE ARCHITECTURAL DRAWINGS FOR FIXTURE LOCATIONS AND MOUNTING HEIGHTS.
10. PROVIDE AUTOMATIC TRAP PRIMERS FOR FLOOR DRAIN TRAP SEALS.
11. PROVIDE, WHEN REQUIRED BY CODE, AN AIR GAP SERVING INDIVIDUAL FIXTURES, DEVICES, APPLIANCES AND APPARATUS.
12. ALL EXPOSED PIPE AND FITTINGS IN FINISHED AREAS SHALL BE CHROME PLATED.
13. PROVIDE CLEANOUTS IN ACCORDANCE WITH APPROPRIATE CODES AND REGULATIONS.
14. COORDINATE EXACT FLOOR DRAIN LOCATIONS WITH ARCHITECTURAL DRAWINGS. SET FLOOR DRAINS BELOW FINISH FLOOR TO ALLOW FOR FLOOR SLOPING TO THE DRAIN.
15. PROVIDE ALL OFFSETS AND FITTINGS AND MAKE CONNECTION TO SITE UTILITIES.
16. COORDINATE PIPING WITH ALL ELECTRICAL EQUIPMENT(PANELS, TRANSFORMERS, ETC.) PRIOR TO ANY INSTALLATION. DO NOT ROUTE ANY PIPING OVER ANY ELECTRICAL PANELS UNDER ANY CIRCUMSTANCES. ANY PIPING RUN OVER PANELS SHALL BE REROUTED AT NO ADDITIONAL COST.

PLUMBING DEMOLITION NOTES

1. REMOVE EXISTING PIPING NOT IN USE BACK TO THE VALVE OR SOURCE AND PROVIDE CAP.
2. RETURN EXISTING PLUMBING FIXTURES AND EQUIPMENT NOT RE-USED BACK TO THE OWNER.
3. PATCH, PAINT, OR REPAIR AS NECESSARY TO RETURN WALLS AND/OR FLOORS BACK TO THEIR EXISTING CONDITION. LEAVE NO HOLES OR REMNANTS OF PLUMBING FIXTURES OR EQUIPMENT PROTRUDING OR VISIBABLE IN NEW SPACE.

ELECTRIC WATER HEATER SCHEDULE

MARK	EWH-1	
KW	3	
KW PER ELEMENT	3	
NUMBER OF ELEMENTS	1	
ELEMENT OPERATION	ON DEMAND	
MIN WATER FLOW TO ACTIVATE	.32 GPM	
STORAGE(GALLONS)	N/A	
STORAGE TEMP(°F)	N/A	
SIZE(H"xW"xD")	14"x7"x4"	
VOLTS/PHASE/HERTZ	120/1/60	
OPERATING WEIGHT(LBS)	4.5	
MANUFACTURER	STIEBEL-ELTRON	
MODEL NUMBER	DHC 3-1	

1650 Prudential Drive
Suite 200
Jacksonville, Florida 32207
Phone: 904-306-9111
Fax: 904-306-9117
ENGINEERING FOR ARCHITECTURE www.tlc-engineers.com

© Copyright 2011 TLC Engineering for Architecture, Inc.

COA 15 TLC NO:812082
DRAWN BY: DJP CHECKED BY: BR
APPROVED BY: BR

GS&P

Design Services For The Built Environment

Atlanta
Birmingham
Charlotte
Cincinnati
Columbus
Dallas
Fort Lauderdale
Knoxville
Jackson
Jacksonville
Louisville
Memphis
Nashville
Richmond
Tampa

GRESHAM SMITH AND PARTNERS
5220 Belfort Road
Suite 100
Jacksonville, FL 32256
904.332.6699
FIRM'S FLORIDA CERT. NO. AAP000034/EB0003806 IB26000797

FLAGLER HOSPITAL
Excellence As A Way Of Life

IS PHASE II

CONSTRUCTION DOCUMENTS

SEAL:
Ryan Lime, P.E.
Florida License #73849

REVISION

No.	Date	Revision

LEGEND AND NOTES - PLUMBING

P0.01

PROJECT:27432.00
DATE: AUG 31, 2012

L:\2012-Jobs\812082-Flagler Hsp MOB IS Exp\CAD-MEP\Sheets P0.01.dwg 8/31/2012 9:16:55 AM djparker

1650 Prudential Drive
Suite 200
Jacksonville, Florida 32207
Phone: 904-306-9111
Fax: 904-306-9117
www.tlc-engineers.com
© Copyright 2011 TLC Engineering for Architecture, Inc.

COA 15 TLC NO:812082
DRAWN BY: DJP CHECKED BY: BR
APPROVED BY: BR

PARTIAL 4TH FLOOR DEMO PLAN – PLUMBING

SCALE: 1/4" = 1'-0"

G S & P

Design Services For The Built Environment

Atlanta
Birmingham
Charlotte
Cincinnati
Columbus
Dallas
Fort Lauderdale
Knoxville
Jackson
Jacksonville
Louisville
Memphis
Nashville
Richmond
Tampa

GRESHAM SMITH AND PARTNERS

5220 Belfort Road
Suite 100
Jacksonville, FL 32256
904.332.6699

FIRM'S FLORIDA CERT. NO. AAP000034/EB0003806 IB26000797

FLAGLER HOSPITAL
Excellence As A Way Of Life

IS PHASE II

CONSTRUCTION DOCUMENTS

SEAL:
Ryan Lime, P.E.
Florida License #73849

REVISION

No. -	Date -	Revision

PARTIAL 4TH FLOOR DEMOLITION PLAN - PLUMBING

P1.01

PROJECT:27432.00
DATE: AUG 31, 2012

L:\2012-Jobs\812082-Flagler Hsp MOB IS Exp\CAD-MEP\Sheets P1.01.dwg 8/31/2012 9:17:08 AM djporker

1650 Prudential Drive
Suite 200
Jacksonville, Florida 32207
Phone: 904-306-9111
Fax: 904-306-9117
www.tlc-engineers.com
© Copyright 2011 TLC Engineering for Architecture, Inc.

COA 15 TLC NO:812082
DRAWN BY: DJP CHECKED BY: RSL
APPROVED BY: RSL

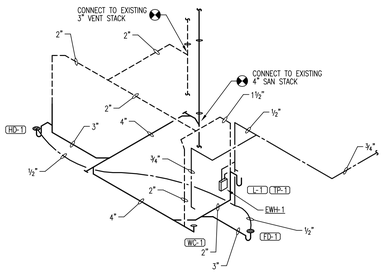

PLUMBING RISER DIAGRAM
SCALE: NTS

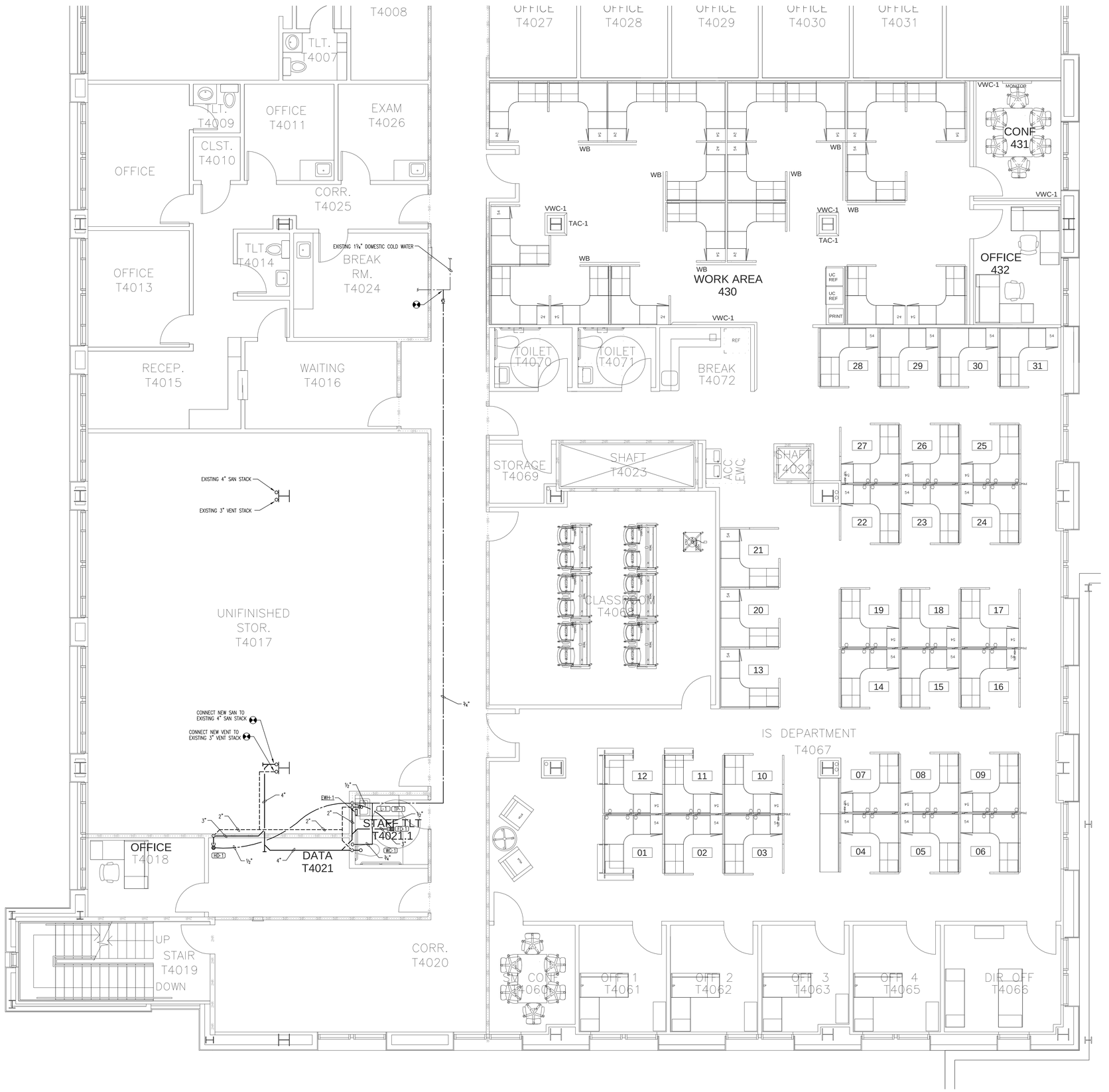

PARTIAL 4TH FLOOR PLAN = PLUMBING
SCALE: 1/4" = 1'-0"

GS&P

Design Services For The Built Environment

Atlanta
Birmingham
Charlotte
Cincinnati
Columbus
Dallas
Fort Lauderdale
Knoxville
Jackson
Jacksonville
Louisville
Memphis
Nashville
Richmond
Tampa

GRESHAM SMITH AND PARTNERS
5220 Belfort Road
Suite 100
Jacksonville, FL 32256
904.332.6699
FIRM'S FLORIDA CERT. NO. AAP000034/EB0003806 IB26000797

FLAGLER HOSPITAL
Excellence As A Way Of Life

IS PHASE II

CONSTRUCTION DOCUMENTS

SEAL:
Ryan Lime, P.E.
Florida License #73849

REVISION

No.	Date	Revision

PARTIAL 4TH FLOOR PLAN - PLUMBING

P2.01

PROJECT:27432.00
DATE: AUG 31, 2012

L:\2012-Jobs\812082-Flagler Hsp MOB IS Exp\CAD-MEP\Sheets P2.01.dwg 8/31/2012 1:46:00 PM djparker

Drawn By:
Checked By:
Approved By:

DEMOLITION PLAN PARTIAL FOURTH FLOOR

0 2' 4' 8' 16'

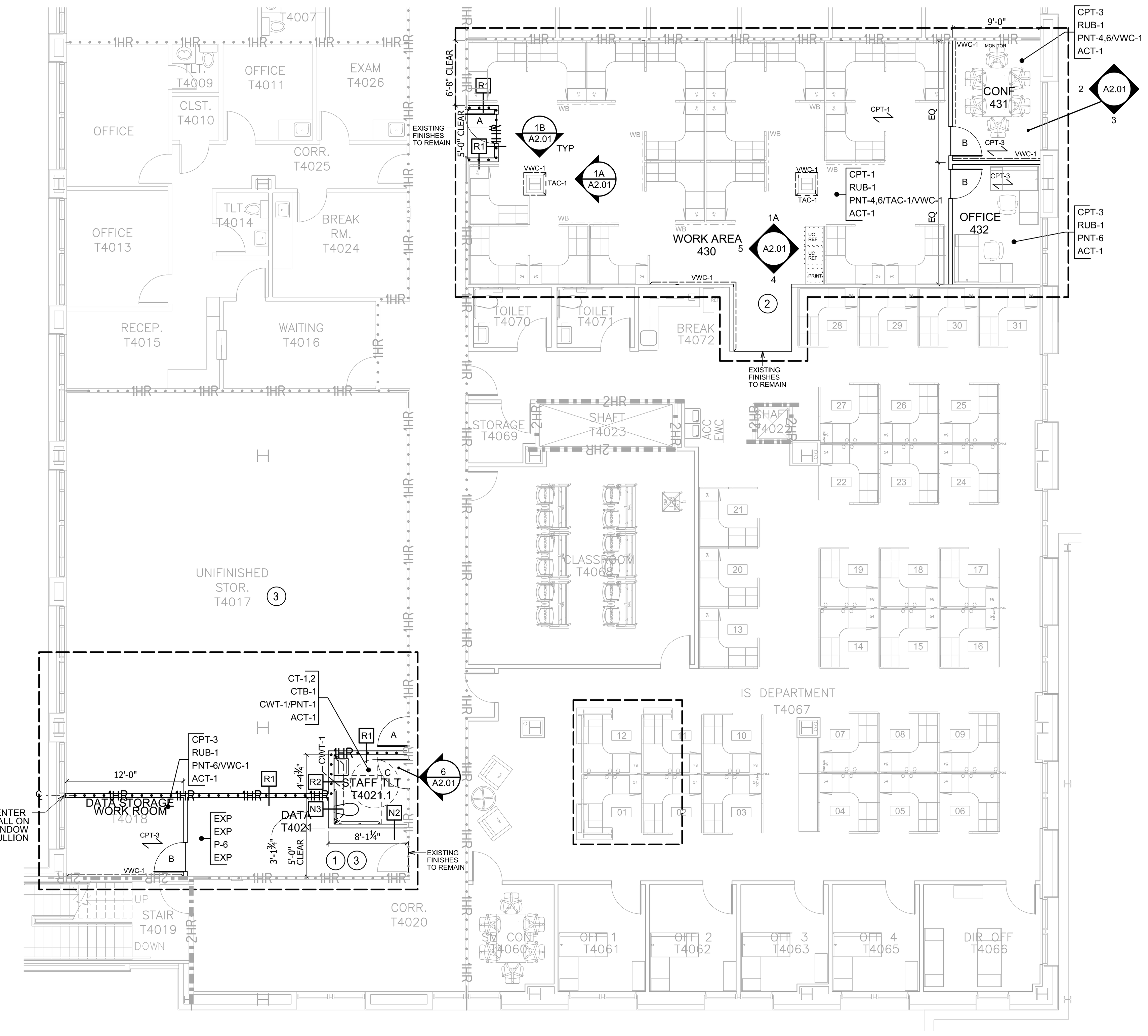

NEW CONSTRUCTION PLAN PARTIAL FOURTH FLOOR

0 2' 4' 8' 16'

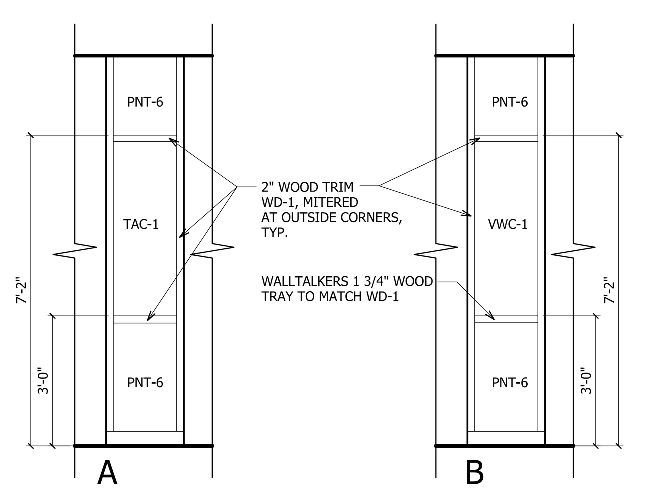

1 ELEVATION WORK AREA 430

0 1' 2' 3' 6'

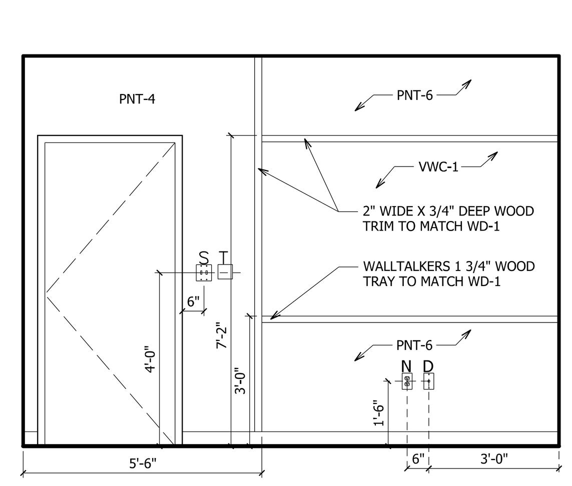

2 ELEVATION CONF 431

0 1' 2' 3' 6'

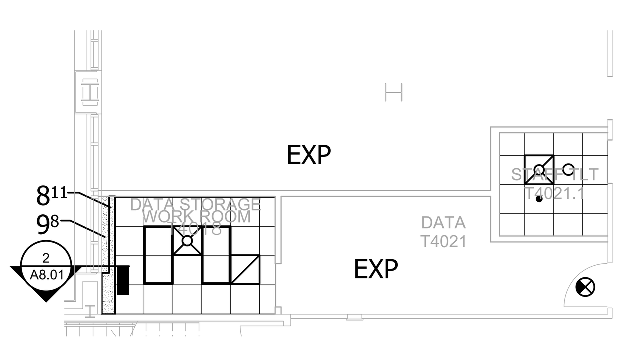

REFLECTED CEILING PLAN DATA STORAGE WORK ROOM T4018

0 2' 4' 8' 16'

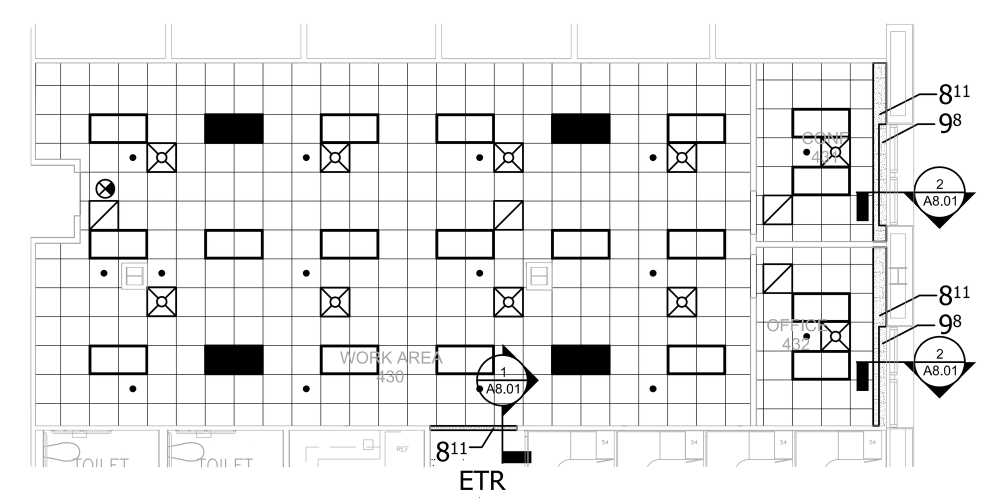

REFLECTED CEILING PLAN WORK AREA 430

0 2' 4' 8' 16'

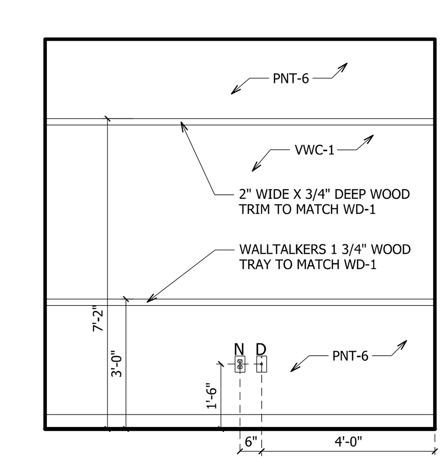

3 ELEVATION CONF 431

0 1' 2' 3' 6'

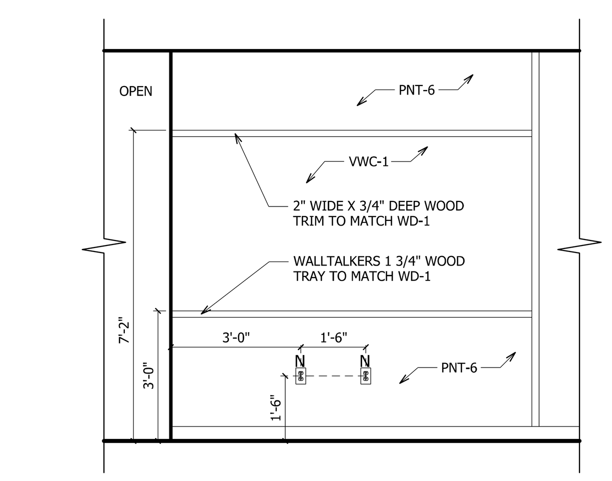

4 ELEVATION WORK AREA 430

0 1' 2' 3' 6'

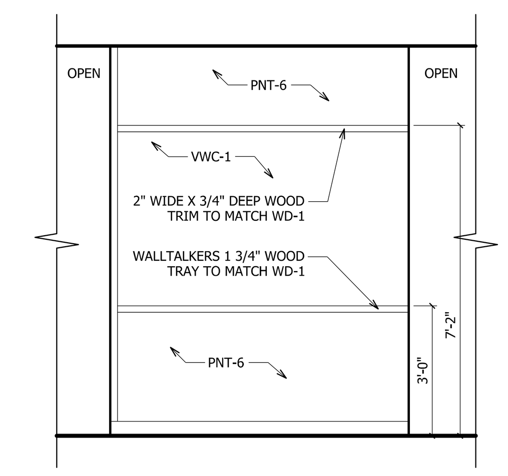

5 ELEVATION WORK AREA 430

0 1' 2' 3' 6'

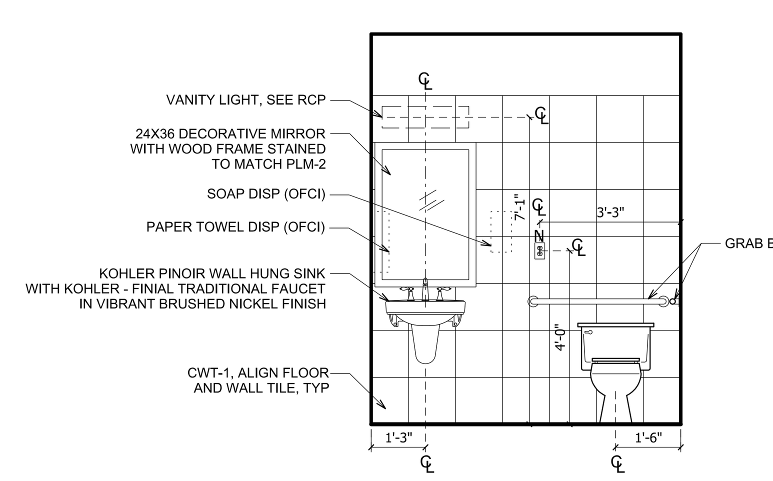

6 ELEVATION STAFF TLT T4021.1

0 1' 2' 3' 6'

INTERIOR DESIGN GENERAL NOTES

A. GENERAL INFORMATION

1. THE CONTRACTOR SHALL READ ALL NOTES BEFORE BEGINNING WORK.
2. THE CONTRACTOR SHALL CAREFULLY STUDY AND COMPARE THE INTERIOR DESIGN DRAWINGS, THE PROJECT MANUAL, AND ALL OTHER DRAWINGS, AND HE/SHE SHALL IMMEDIATELY NOTIFY THE INTERIOR DESIGNER IN WRITING OF ANY INCONSISTENCIES OR OMISSIONS THAT HE/SHE MAY DISCOVER.
3. THE CONTRACTOR SHALL NOT SCALE DRAWINGS. IF DIMENSIONS ARE IN QUESTION, THE CONTRACTOR SHALL BE RESPONSIBLE FOR OBTAINING CLARIFICATION FROM THE INTERIOR DESIGNER BEFORE CONTINUING WITH WORK.
4. THE CONTRACTOR SHALL NOTIFY THE INTERIOR DESIGNER OF ITEMS REQUIRING FINISH SELECTIONS THAT ARE NOT CLARIFIED IN THE CONTRACT DOCUMENTS OR IN THE PROJECT MANUAL.
5. THE CONTRACTOR SHALL NOTIFY THE INTERIOR DESIGNER IF ANY WORK INDICATED IN THE CONTRACT DOCUMENTS CAN NOT BE PERFORMED DUE TO EXISTING FIELD CONDITIONS.
6. SEE SPECIFICATIONS ON SHEET A9.1 FOR ADDITIONAL INFORMATION.

B. CARPET

1. CONTRACTOR SHALL ALLOW AT LEAST 6-8 WEEKS LEAD TIME FOR CARPET AVAILABILITY AND DELIVERY.

C. FLOORING TRANSITIONS

1. ALL FLOORING TRANSITIONS SHALL OCCUR AT THE CENTERLINE OF ALL DOORS, UNLESS OTHERWISE NOTED.
2. SEE DETAILS ON SHEET A8.01 FOR CLARIFICATION OF FLOORING TRANSITIONS.
3. INSTALL METAL EDGE STRIPS AT LOCATIONS WHERE EXPOSED EDGE OF TILE FLOOR MEETS CARPET OR OTHER FLOORING THAT FINISHES FLUSH WITH TOP OF TILE. REFER TO DETAILS ON THIS SHEET.

D. INTERIOR PAINTING

1. IF ADJACENT WALL IS SCHEDULED TO HAVE A PAINT FINISH, PAINT VERTICAL AND HORIZONTAL SURFACES OF BULKHEADS AND SOFFITS TO MATCH WALL PAINT FINISH, UNLESS OTHERWISE NOTED.
2. WHERE GYP BD SOFFITS ARE SCHEDULED TO HAVE ACCENT PAINT, PAINT FINISH SHALL BE APPLIED TO VERTICAL AND HORIZONTAL SURFACE.

E. WINDOWS, DOORS, DOOR FRAMES, ACCESS DOORS, ETC.

1. CONTRACTOR SHALL PAINT ALL METAL ACCESS DOORS, ELECTRICAL PANELS, RECESSED CABINET FACES, HVAC REGISTERS, GRILLES, ETC. TO MATCH ADJACENT WALL COLOR, UNLESS LOCAL CODES REQUIRE OTHERWISE.
2. INTERIOR HOLLOW METAL DOORS, DOOR FRAMES, WINDOW FRAMES AND VIEW WINDOW FRAMES SHALL BE PAINTED PNT-7 IN A SEMIGLOSS FINISH.

LEGEND

FINISH TAG: FLOOR / BASE / WALL / CEILING / SOFFITS

FINISH A —— FINISH B: INDICATES EXTENT OF FINISH MATERIAL AND COLOR.

INDICATES DIRECTION OF WD GRAIN AND / OR PATTERN

ETR INDICATES EXISTING TO REMAIN FINISH

FINISH SCHEDULE

TAG	FINISH	MANUFACTURER
ACT-1	CEILING TILE	ARMSTRONG ULTIMA BEVELED TEGULAR 2X2
PNT-4	PAINT	SHERWIN WILLIAMS SPICY HUE SW6342
PNT-6	PAINT	SHERWIN WILLIAMS KILIM BEIGE SW6106
PNT-7	PAINT (DOOR FRAMES)	SHERWIN WILLIAMS TURKISH COFFEE SW6076, SEMI-GLOSS
TAC-1	TACKABLE SURFACE	WALLTALKERS TAC-WALL , 86 ACORN
VWC-1	VINYL WALLCOVERING	WALLTALKERS NU-VU-RITE, NV50
CPT-1	CARPET	SHAW EMBELLISH TILE 59573 WOVEN METAL 71112
CPT-3	CARPET	SHAW EMBELLISH TILE 59573 WOVEN 71111
RUB-1	RUBBER BASE	JOHNSONITE 4" HIGH BASE, 47 BROWN
WD-1	WOOD	CLOSED GRAIN HARDWOOD STAINED TO MATCH TRIM IN ADJOINING I.S. DEPARTMENT.
CT-1	CERAMIC TILE	AMERICAN OLEAN SAN MARTINO, EQUAL BLEND OF SA30 GIALLO, 13" X 13" AND SA31 ROSSO, 13" X 13"
CT-2	CERAMIC TILE	AMERICAN OLEAN SAN MARTINO, UNIVERSAL DOTS SA32, 3"X3"
CWT-1	CERAMIC WALL TILE	AMERICAN OLEAN SAN MARTINO, SA30 GIALLO, 13"X13"
CTB-1	CERAMIC TILE BASE	AMERICAN OLEAN SAN MARTINO, BULLNOSE 6"X13" (FIELD CUT)

DEMOLITION KEY NOTES

(A) REMOVE PORTION OF SYSTEMS FURNITURE AS SHOWN. RETURN TO OWNER'S STOCK FOR REINSTALLATION. COORDINATE WITH OWNER AND FURNITURE DEALER.

(B) REMOVE EXISTING CASEWORK AND CAP PLUMBING WHERE REQUIRED ACCORDING TO PLUMBING DRAWINGS.

(C) REMOVE EXISTING DOOR AND RETURN TO OWNER'S STOCK.

(D) PATCH AND REPAIR AREAS OUTSIDE DEPARTMENT AFFECTED BY CONSTRUCTION WITH FINISHES TO MATCH EXISTING.

(E) DE-RATE EXISTING ONE HOUR PARTITION BETWEEN NEW AND EXISTING IS DEPARTMENTS AS REQUIRED.

(F) REMOVE EXISTING FENCE MATERIAL. VERIFY IF RELOCATION TO ADJACENT SHELL SPACE IS REQUIRED WITH OWNER PRIOR TO DEMOLITION.

NEW CONSTRUCTION KEY NOTES

(1) RELOCATE EXISTING DATA EQUIPMENT FROM JAKADOFSKY BUILDING TO THIS ROOM. SEE MECHANICAL AND ELECTRICAL DRAWINGS FOR ADDITIONAL INFORMATION.

(2) ALIGN CARPET TILE PATTERN IN NEW AREA WITH TILE IN ADJOINING SPACE.

(3) CEILING IN THIS AREA TO REMAIN EXPOSED.

GENERAL NOTES FOR DEMOLITION FLOOR PLANS

101. THE DEMOLITION DRAWINGS HAVE BEEN DEVELOPED FROM EXISTING DRAWINGS, WHICH WERE PROVIDED TO THE ARCHITECT/ENGINEER BY THE OWNER, AND THEY MAY NOT REFLECT ACTUAL FIELD CONDITIONS. PRIOR TO PROCEEDING WITH ANY WORK, THE CONTRACTOR SHALL VERIFY THE ACCURACY OF THESE DRAWINGS IN COMPARISON TO EXISTING FIELD CONDITIONS AND THEN IMMEDIATELY NOTIFY THE ARCHITECT IN WRITING OF ANY INCONSISTENCIES BETWEEN THESE DRAWINGS AND ACTUAL CONDITIONS.

102. THE CONTRACTOR SHALL ALSO IMMEDIATELY NOTIFY THE ARCHITECT IN WRITING IF ANY DEMOLITION OR NEW CONSTRUCTION WORK (AS INDICATED IN THE CONSTRUCTION DOCUMENTS) CANNOT BE PERFORMED DUE TO EXISTING FIELD CONDITIONS.

103. IF ANY EXISTING FIREPROOFING AND/OR RATED ASSEMBLIES (WHICH ARE SUPPOSED TO REMAIN) ARE DAMAGED DURING DEMOLITION, THEY SHALL BE REPAIRED TO CONFORM TO THE ORIGINAL FIRE PROTECTION REQUIREMENTS. ALSO, THE INTEGRITY OF EXISTING RATED FLOOR, WALL, BARRIER AND ROOF ASSEMBLIES (WHICH ARE SUPPOSED TO REMAIN) SHALL BE MAINTAINED THROUGHOUT ALL PHASES OF CONSTRUCTION. (NOTE: AS APPLICABLE, CONTACT ARCHITECT TO VERIFY TESTED ASSEMBLIES TO BE USED FOR REPAIRS.)

104. REMOVE EXISTING CONSTRUCTION AS INDICATED. TYPICAL WALL REMOVAL SHALL INCLUDE MECHANICAL, PLUMBING, ELECTRICAL, COMMUNICATIONS AND SECURITY SYSTEMS CONTAINED THEREIN. REMOVE DOORS, CABINETWORK, CASEWORK, WINDOWS, FRAMES, FINISHES, FIXTURES AND THEIR ATTACHMENTS AS REQUIRED. AFTER REMOVAL, REPAIR HOLES IN EXISTING-TO-REMAIN FLOORS, WALLS, BARRIERS AND ROOFS TO COMPLY WITH ORIGINAL FIRE, SMOKE AND SOUND ASSEMBLIES, FIRE PROTECTION REQUIREMENTS, AND STRUCTURAL INTEGRITY. PREPARE SURFACES TO RECEIVE NEW FINISH PER INTERIOR DESIGN DRAWINGS AND SPECIFICATIONS. (WHERE NEW FINISH IS CALLED FOR ON AN EXISTING SURFACE, REMOVE THE EXISTING FINISH AND PREPARE EXISTING SURFACE TO RECEIVE THE NEW FINISH.)

105. SEE MECHANICAL, PLUMBING, AND ELECTRICAL DRAWINGS FOR DEMOLITION OF UTILITIES.

106. AT ALL WALLS/PARTITIONS/BARRIERS, FLOORS AND ROOFS WHICH ENCLOSE OR TOUCH SPACES WHERE WORK IS BEING PERFORMED AS A PART OF THIS PROJECT, THE CONTRACTOR SHALL VERIFY THAT THIS EXISTING CONSTRUCTION (INCLUDING DAMPERS, DUCT PENETRATIONS, DOORS, WINDOWS, FRAMES, ETC.) MEETS THE FIRE, SMOKE AND SOUND ASSEMBLY RATINGS DESIGNATED ON THESE DRAWINGS. THE CONTRATOR SHALL ALSO MAKE ANY REPAIRS AND/OR MODIFICATIONS NECESSARY TO BRING THE EXISTING CONSTRUCTION (INCLUDING DAMPERS, DUCT PENETRATIONS, DOORS, WINDOWS, FRAMES, ETC.) UP TO THE PROPER INDICATED FIRE, SMOKE AND SOUND ASSEMBLY RATINGS. DOORS, WINDOWS AND FRAMES WHICH DO NOT MEET THE REQUIREMENTS OF THE DESIGNATED WALL/PARTITION/BARRIER ASSEMBLIES (INCLUDING PROPER LABELS) SHALL BE REPLACED.

107. DEMOLITION WORK SHALL BE EXECUTED IN CONFORMANCE WITH ALL CODES AND ORDINANCES AS SET FORTH BY ALL AUTHORITIES HAVING JURISDICTION [AHJ].

108. THE CONTRACTOR SHALL NOT CUT EXISTING OR NEW STRUCTURAL WORK IN ANY MANNER THAT MAY RESULT IN A REDUCTION OF LOAD CARRYING CAPACITY OR LOAD/DEFLECTION RATIO. THE CONTRACTOR SHALL NOTIFY THE ARCHITECT IIN WRITING OF ALL STRUCTURAL CUTS PRIOR TO EXECUTION SO THAT APPROVAL CAN BE OBTAINED IN ADVANCE FROM THE ARCHITECT AND STRUCTURAL ENGINEER.

109. THE CONTRACTOR SHALL REPLACE OR REPAIR ANY EXISTING-TO-REMAIN MATERIALS AND FINISHES (CEILING GRID, CEILING TILE, GYPSUM BOARD, FINISHES, DOORS, WINDOWS, FRAMES, WALL PROTECTION, ETC.) WHICH ARE DAMAGED DURING DEMOLITION OR CONSTRUCTION.

110. THE "LIMITS OF CONSTRUCTION" LINES SHOWN ON THE ARCHITECT'S DEMOLITION FLOOR PLANS APPLY ONLY TO THE LIMITS OF THE ARCHITECTURAL DEMOLITION. SEE THE OTHER DISCIPLINES' DRAWINGS FOR THE LIMITS OF THE DEMOLITION FOR THEIR DISCIPLINE.

GENERAL NOTES FOR FLOOR PLANS

1. EXISTING PARTITIONS, DOORS, WINDOWS, PLUMBING FIXTURES, CASEWORK, EQUIPMENT, ETC., ARE SCREENED-BACK" ON THE FLOOR PLANS. NEW CONSTRUCTION IS INDICATED BY SOLID LINES. REFER TO DEMOLITION DRAWINGS FOR EXTENT OF EXISTING TO BE REMOVED.
2. ITEMS DENOTED ON THE NEW CONSTRUCTION FLOOR PLANS WITH A DASHED LINE ARE BEING FURNISHED BY THE OWNER AND OR UPPER WALL CABINETRY. EQUIPMENT INDICATED WITH DASHED LINES SHALL BE FURNISHED BY THE OWNER. THE CONTRACTOR SHALL COORDINATE WITH THE OWNER ON DELIVERY AND INSTALLATION OF THE EQUIPMENT.
3. REFER TO DRAWINGS FOR TYPICAL DETAILS WHICH APPLY TO THE NEW CONSTRUCTION FLOOR PLANS, BUT WHICH MAY NOT BE SPECIFICALLY KEYED IN ON THE FLOOR PLANS.
4. ALL PARTITIONS ARE TYPE "N1" UNLES NOTED OTHERWISE. SEE SHEET A8.01 FOR PARTITION TYPES AND LOCATION OF SOUND ATTENUATION BLANKETS.
5. WHERE DEMOLITION OF CERTAIN ITEMS LEAVES PENETRATIONS IN EXISTING-TO-REMAIN FLOORS, WALLS, CEILING, ROOFS, ETC., PATCH SUCH PENETRATIONS AS REQUIRED TO MEET ORIGINAL FIRE PROTECTION AND STRUCTURAL REQUIREMENTS.
6. WITHIN RENOVATION AREA WHERE EXISTING WALLS OR PARTITIONS ARE INDICATED TO BE REMOVED ON DEMOLITION PLAN, PATCH ADJOINING WALLS TO MATCH EXISTING AND OR PROVIDE FINISHES AS SCHEDULED.
7. CONTRACTOR SHALL BE RESPONSIBLE FOR PATCHING ALL FLOORING, FINISHES, WALLS AND CEILINGS AS REQUIRED TO MATCH EXISTING WHERE HVAC, PLUMBING, FIRE PROTECTION AND ELECTRICAL WORK IS PERFORMED AND ANY DISTURBED SPACES OUTSIDE OF RENOVATION AREA.
8. CONTRACTOR SHALL MAINTAIN THE INTEGRITY OF ALL SMOKE PARTITIONS AND FIRE RATED ASSEMBLIES. CONTRACTOR SHALL INFORM THE ARCHITECT IN WRITING OF ANY COMPROMISES IN THESE ASSEMBLIES WHETHER EXISTING OR NEW.
9. THE CONTRACTOR SHALL NOT SCALE THE DRAWINGS. IF DIMENSIONS ARE IN QUESTION, THE CONTRACTOR SHALL BE RESPONSIBLE FOR OBTAINING CLARIFICATION IN WRITING FROM THE ARCHITECT BEFORE CONTINUING WITH CONSTRUCTION.
10. DIMENSIONS ARE FROM FACE OF EXISTING SURFACE TO FACE OF NEW PARTITION UNLESS NOTED OTHERWISE.
11. CONTRACTOR SHALL VERIFY ON SITE ALL DIMENSIONS AND EXISTING CONDITIONS PRIOR TO ORDERING MATERIALS AND PROCEEDING WITH WORK.
12. ALL DOORS ARE LOCATED 6" FROM ADJACENT WALL UNLESS NOTED OTHERWISE.
13. THE CONTRACTOR SHALL COMPLY WITH ALL REQUIREMENTS OF THE SPECIFICATIONS, SCHEDULES, ETC. EXPOSED WHICH ARE INCLUDED IN THE CONSTRUCTION DOCUMENTS. THE CONTRACTOR SHALL CAREFULLY STUDY AND COMPARE THESE DRAWINGS TO THE SPECIFICATIONS AND HE SHALL IMMEDIATELY NOTIFY THE ARCHITECT IN WRITING OF ANY INCONSISTENCIES THAT HE MAY DISCOVER.
14. THE CONTRACTOR SHALL PROVIDE CHASES FOR MECHANICAL, PLUMBING, FIRE PROTECTION, ELECTRICAL AND COMMUNICATIONS AS REQUIRED AND AS NECESSARY.
15. PIPING LOCATED INSIDE THE BUILDING SHALL BE CONCEALED IN FURRED SPACES WITH THE EXCEPTION OF PIPING IN STAIRWAYS, ELECTRICAL ROOMS AND MECHANICAL ROOMS. THE CONTRACTOR SHALL COORDINATE WITH OTHER TRADES TO PROVIDE FURRING FOR PIPING INSTALLED IN FINISHED AREAS. THE CONTRACTOR SHALL GAIN APPROVAL FROM THE ARCHITECT PRIOR TO LOCATING AND/OR PROVIDING ANY "FURRED SPACES" WHICH ARE NOT SPECIFICALLY INDICATED ON THE FLOOR PLANS.
16. CAULK AT ALL JUNCTURES OF INTERIOR FACES OF DOOR FRAMES, CABINET WORK,CASEWORK, ETC., WITH ADJACENT MATERIALS (EVEN WHERE JOINT MAY NOT BE READILY VISIBLE).
17. THE CONTRACTOR SHALL VERIFY THAT EXIT EGRESS IS MAINTAINED FOR ALL OCCUPIED AREAS OF THE BUILDING THROUGHOUT ALL PHASES OF CONSTRUCTION. ALL EXISTING STAIRWAYS MUST BE MAINTAINED CLEAR AND ACCESSIBLE; AND THE INTEGRITY OF THE DISIGNATED ENCLOSURE RATING AROUND EXISTING STAIRWAYS MUST BE MAINTAINED THROUGHOUT ALL PHASES OF CONSTRUCTION.

GENERAL NOTES FOR REFLECTED CEILING PLANS

501. WHERE EXISTING LAY-IN CEILINGS ARE REMOVED AND RE-INSTALLED, THE CONTRACTOR SHALL TAKE CARE NOT TO DAMAGE EITHER THE CEILING TILES OR THE GRID. ANY DAMAGED TILES OR GRID SHALL BE REPLACED WITH NEW MATERIAL. THESE NEW MATERIALS SHALL MATCH THE EXISTING IN A UNIFORM MANNER FOR COLOR, TEXTURE, PATTERN, ETC. IF UNIFORMITY CANNOT BE ACHIEVED, THE CONTRACTOR SHALL REPLACE THE ENTIRE CEILING WITHIN THAT SPACE WITH NEW MATERIAL. THE CONTRACTOR SHALL PROVIDE NEW MATERIAL AS APPROVED BY BOTH OWNER AND ARCHITECT.

502. CEILING HEIGHT SHALL BE 9'-0" AFF UNLESS OTHERWISE NOTED.

503. CENTER CEILING GRID IN ROOM UNLESS OTHERWISE NOTED.

LEGEND

EXISTING TO REMAIN
NEW CONSTRUCTION
EXISTING ONE-HOUR RATED FIRE BARRIER — 1HR
EXISTING ONE-HOUR RATED SMOKE BARRIER — 1HRS
EXISTING TWO-HOUR RATED FIRE BARRIER — 2HR
EXISTING TWO-HOUR RATED (SHAFTWALL) FIRE BARRIER — SFT
EXISTING TWO-HOUR RATED SMOKE BARRIER — 2HRS
ONE-HOUR RATED FIRE BARRIER** — 1HR
ONE-HOUR RATED SMOKE BARRIER** — 1HRS
TWO-HOUR RATED FIRE BARRIER** — 2HR
TWO-HOUR RATED (SHAFTWALL) FIRE BARRIER** — SFT
TWO-HOUR RATED SMOKE BARRIER** — 2HRS
OWNER FURNISHED EQUIPMENT

G S & P ®

Design Services For The Built Environment

Atlanta
Birmingham
Charlotte
Cincinnati
Columbus
Dallas
Fort Lauderdale
Knoxville
Jackson
Jacksonville
Louisville
Memphis
Nashville
Richmond
Tampa

GRESHAM SMITH AND PARTNERS
5220 Belfort Road
Suite 100
Jacksonville, FL 32256
904.332.6699
FIRM'S FLORIDA CERT. NO. AAP000034/EB0003806 IB26000797

FLAGLER HOSPITAL
Excellence As A Way Of Life

IS PHASE II

CONSTRUCTION DOCUMENTS

SEAL:

HILLARY MCDONALD
ID 5463

REVISION		
No. -	Date -	Revision

DEMOLITION, NEW CONSTRUCTION AND REFLECTED CEILING PLANS

A2.01

PROJECT:28477.01
DATE:AUGUST 31, 2012

LEV $LNM1$ $LNM2$ $LNM3$ $LNM4$ $LNM5$
DGN $SYTIME$ $DISPLAY$ $FENCE$ $PROJECT$ $WORK$ Pages: $PAGE$ $REF1$ $REF2$ $REF3$ $REF4$ $REF5$
$INSTR$ $PLOTTER$ $DATE$ $TIME$ $SCALE$ FBL PRF TBL
$USER$

Drawn By:
Checked By:
Approved By:

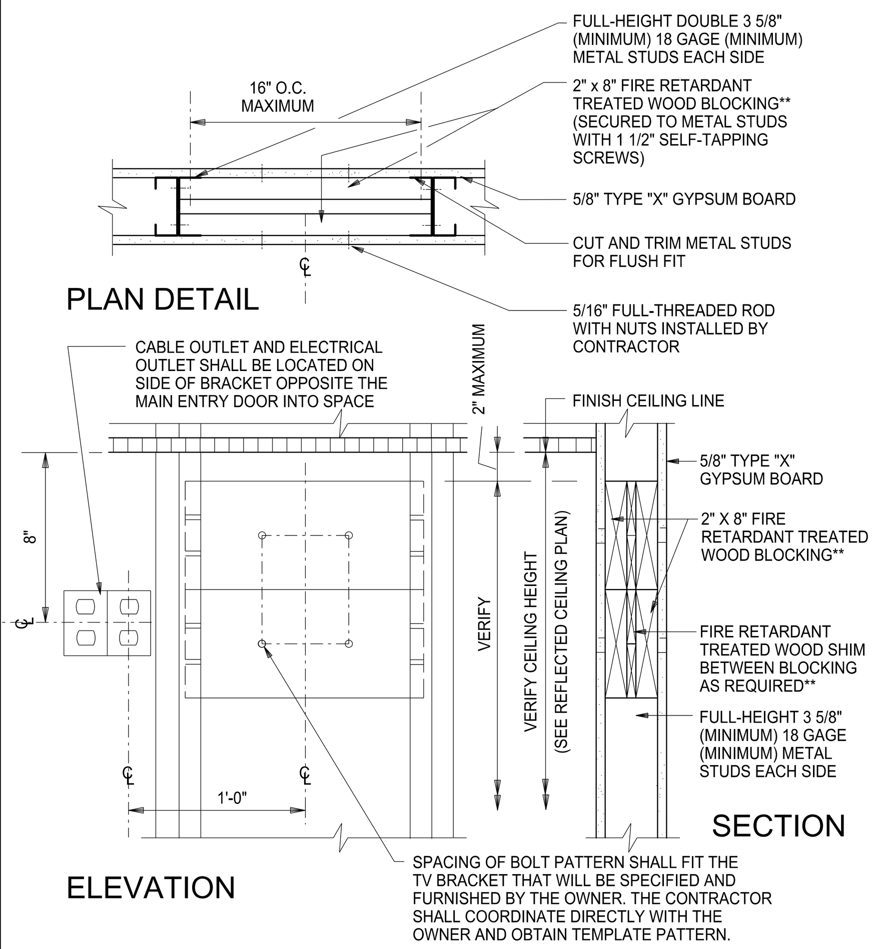

**NOTE:
PRIOR TO USING "FIRE RETARDANT TREATED WOOD" REINFORCEMENT, THE CONTRACTOR SHALL FIRST VERIFY THAT THE USE OF THIS MATERIAL IS ACCEPTABLE TO ALL AUTHORITIES HAVING JURISDICTION. IF "FIRE RETARDANT TREATED WOOD" IS NOT ACCEPTABLE, THE CONTRACTOR SHALL PROVIDE STEEL REINFORCEMENT WITHIN THE WALLS.

5 DETAIL — NOT TO SCALE
BLOCKING FOR OWNER FURNISHED WALL MOUNTED TV BRACKET

NOTE:
IF PIPE IS TO BE INSULATED, DO NOT RUN PIPE INSULATION THROUGH THE WALL. AFTER PACKING GAP THROUGH WALL WITH SAFING INSULATION AND U. L. APPROVED FIRESTOP SEALANT AS INDICATED BELOW, FLARE PIPE INSULATION ONTO FACE OF WALL AROUND PIPE ON BOTH SIDES OF WALL, AND SEAL TO FACE OF WALL WITH INSULATION MASTIC.

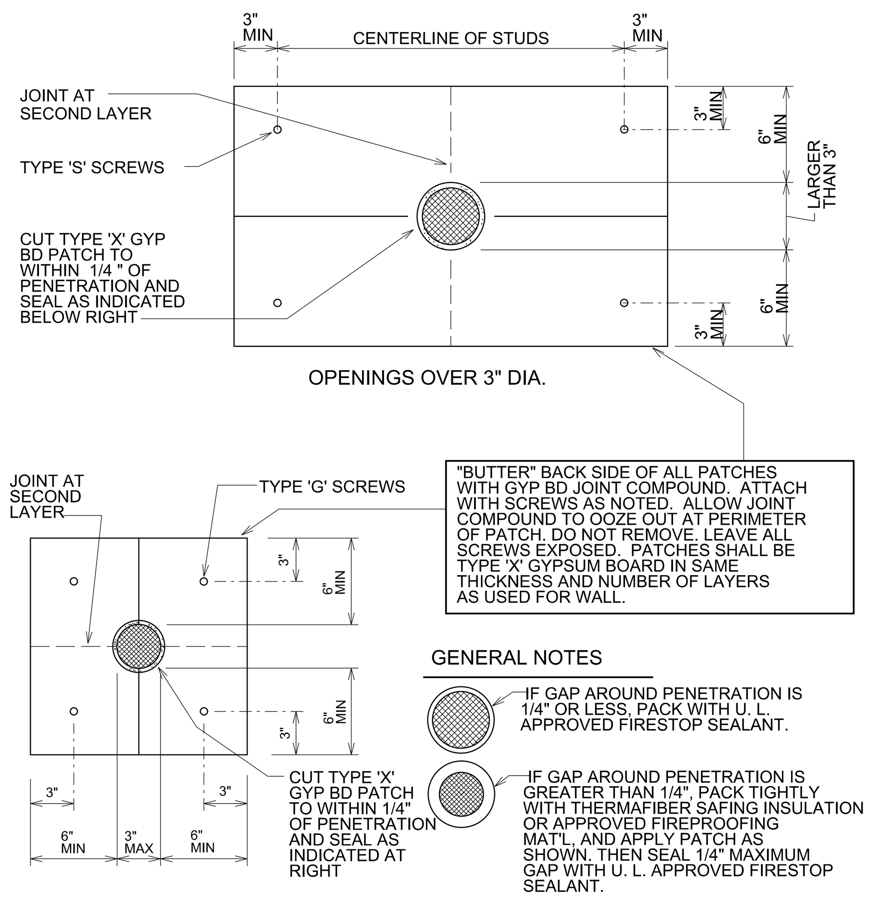

"BUTTER" BACK SIDE OF ALL PATCHES WITH GYP BD JOINT COMPOUND. ATTACH WITH SCREWS AS NOTED. ALLOW JOINT COMPOUND TO OOZE OUT AT PERIMETER OF PATCH. DO NOT REMOVE. LEAVE ALL SCREWS EXPOSED. PATCHES SHALL BE TYPE 'X' GYPSUM BOARD IN SAME THICKNESS AND NUMBER OF LAYERS AS USED FOR WALL.

GENERAL NOTES
- IF GAP AROUND PENETRATION IS 1/4" OR LESS, PACK WITH U. L. APPROVED FIRESTOP SEALANT.
- IF GAP AROUND PENETRATION IS GREATER THAN 1/4", PACK TIGHTLY WITH THERMAFIBER SAFING INSULATION OR APPROVED FIREPROOFING MAT'L, AND APPLY PATCH AS SHOWN. THEN SEAL 1/4" MAXIMUM GAP WITH U. L. APPROVED FIRESTOP SEALANT.

6 DETAIL — NOT TO SCALE
PATCHING AND SEALING PENETRATIONS IN RATED AND/OR RATED SMOKE WALLS

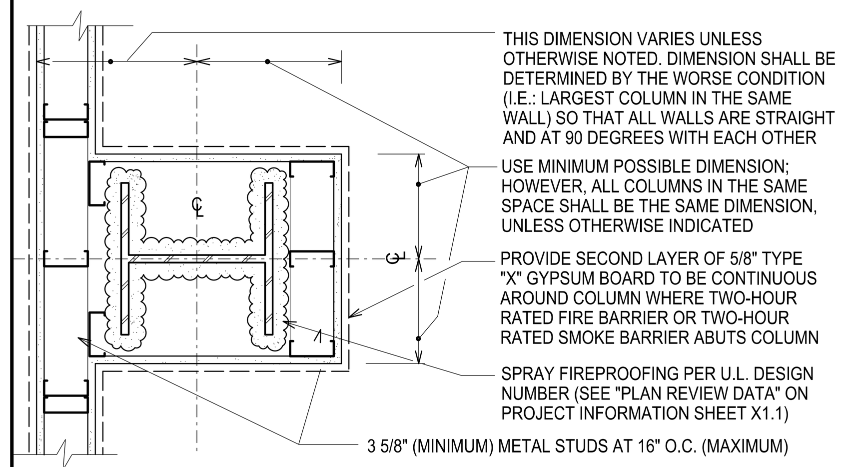

NOTE: GYPSUM BOARD AT WALLS/PARTITIONS/BARRIERS AROUND COLUMN SHALL BE STRUCTURALLY INDEPENDENT OF COLUMN

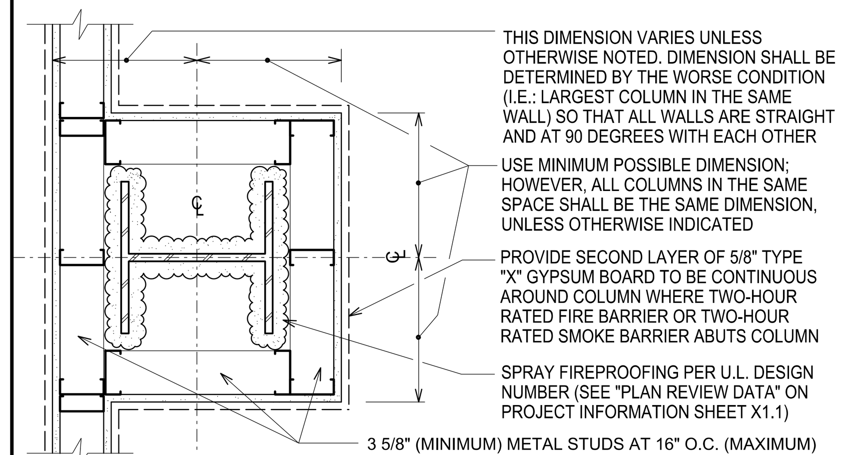

7 DETAIL — NOT TO SCALE
WALLS/PARTITIONS/BARRIERS BY-PASSING OR ABUTTING COLUMNS

DOOR AND FRAME SCHEDULE

DOOR				FRAME		DETAILS		HDWARE	REMARKS
TAG	SIZE	MAT'L	FIRE RTG	TYPE	MAT'L	HEAD	JAMB		
A	3'-0" X 7'-0" X 1 3/4"	WD	45 MIN	F1	HM	1	2	A	REINSTALL DOORS SALVAGED IN DEMO WHERE POSSIBLE
B	3'-0" X 7'-0" X 1 3/4"	WD	-	F1	WD	3	4	B	
C	3'-0" X 7'-0" X 1 3/4"	WD	45 MIN	F1	HM	1	2	C	

HARDWARE

ALL HARDWARE SHALL MATCH BUILDING STANDARDS. KEY LOCKSETS COMPATIBLE WITH BUILDING MASTER KEY.

GROUP A - CORRIDOR

1 1/2 PAIR BUTTS - MCKINNEY	TA 2314 4.5 X 4.5
1 LOCKSET - YALE	OFFICE FUNCTION TT X E3 X 8860 LEVER HANDLE
1 CLOSER	3501BF X SB X TB
1 WALLSTOP	407 1/2
3 SILENCERS	4035

GROUP B - OFFICE

1 1/2 PAIR BUTTS - MCKINNEY	FBB 179 4.5 X 4.5
1 LOCKSET - YALE	OFFICE FUNCTION TT X E3 X 8807 LEVER HANDLE
1 WALLSTOP	407 1/2
3 SILENCERS	4035

GROUP C -TOILET OR DRESSING

1 1/2 PAIR BUTTS - MCKINNEY	FBB 179 4.5 X 4.5
1 PRIVACY SET - YALE	PRIVACY FUNCTION TT X E3 X 8802 LEVER HANDLE
1 WALLSTOP	407 1/2
3 SILENCERS	4035

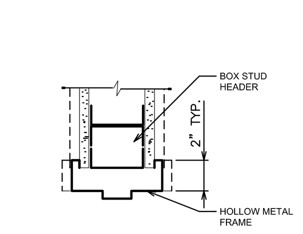

1 DOOR HEAD DETAIL — NOT TO SCALE

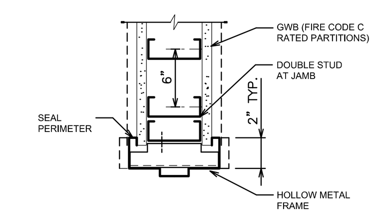

2 DOOR JAMB DETAIL — NOT TO SCALE

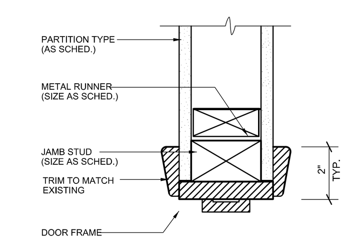

3 DOOR HEAD DETAIL — NOT TO SCALE

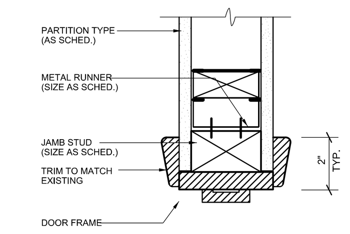

4 DOOR JAMB DETAIL — NOT TO SCALE

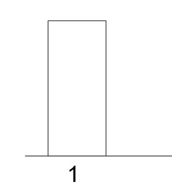

DOOR TYPES

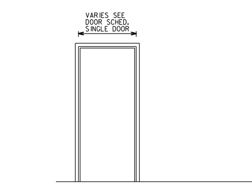

DOOR FRAME TYPE

NOTE:
IN ALL RATED PARTITIONS AND/OR RATED SMOKE PARTITIONS, THE SURFACE AREA OF THE INDIVIDUAL METALLIC OUTLET OR SWITCH BOXES SHALL NOT EXCEED 16 SQUARE INCHES. THE AGGREGATE SURFACE AREA OF THE BOXES SHALL NOT EXCEED 100 SQUARE INCHES PER 100 SQUARE FEET. BOXES WHICH EXCEED THESE STANDARDS SHALL BE RECESSED AS SHOWN IN "RECESSED METAL WALL CABINETS" DETAIL. BOXES LOCATED ON OPPOSITE SIDES OF RATED AND/OR RATED SMOKE PARTITIONS SHALL BE SEPARATED BY A HORIZONTAL DISTANCE OF 24 INCHES MINIMUM, REGARDLESS OF THE VERTICAL SEPARATION OF THE BOXES.

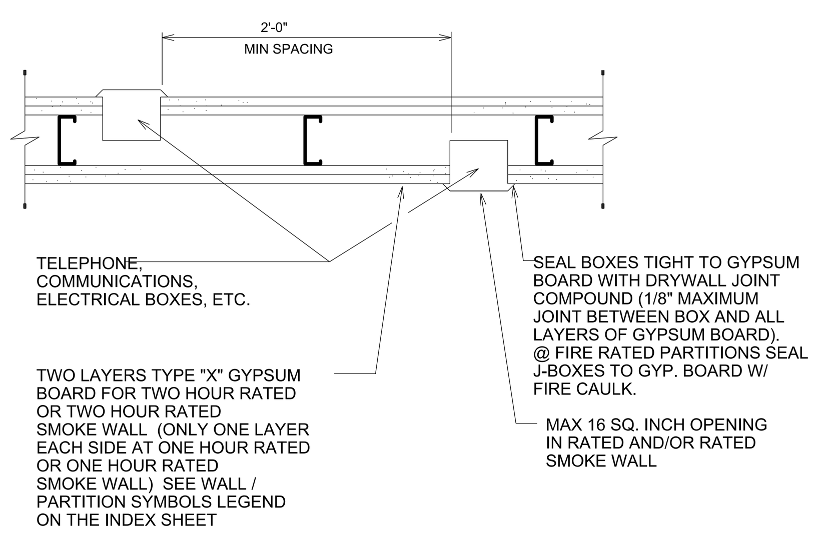

8 DETAIL — NOT TO SCALE
TELEPHONE, COMMUNICATIONS AND ELECTRICAL BOXES IN RATED AND/OR RATED SMOKE WALLS

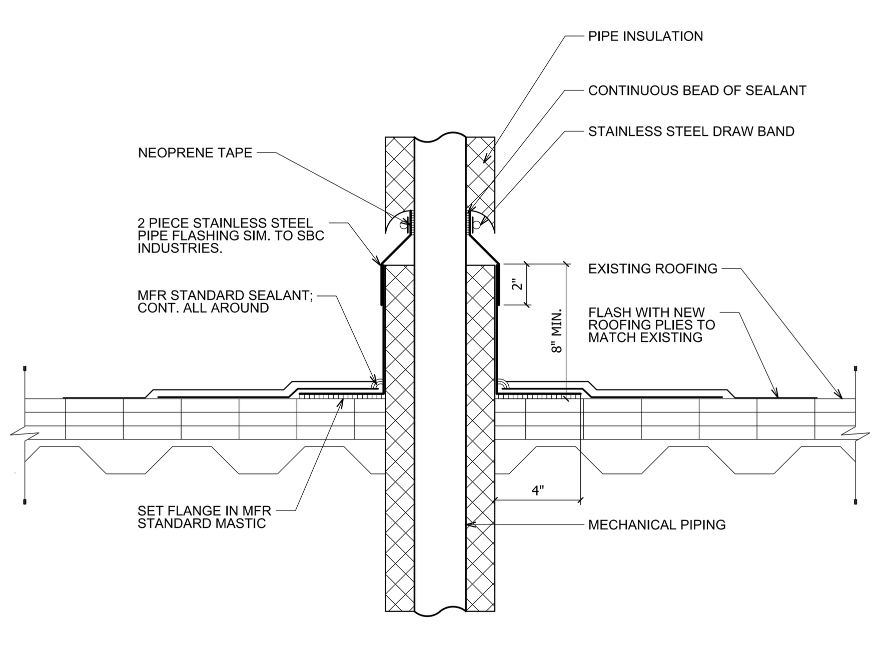

NOTE: CONTRACTOR SHALL ENSURE BUILDING ENVELOPE REMAINS WATER TIGHT AT ALL TIMES. IF ROOFING WORK IS INCOPLETE AT THE END OF A WORK DAY CONTRACTOR IS RESPONSIBLE FOR LEAVING THE ROOF IN A WATER TIGHT CONDITION UNTIL ROOF WORK CAN BE COMPLETED.

NOTE: CONTRACTOR IS RESOPNSIBLE FOR CONFIRMING ROOF TYPE/MFR AND PERFORM ALL ROOFING WORK IN A MANNER THAT WILL NOT VOID ANY EISTING ROOF WARRANTIES.

9 DETAIL — NOT TO SCALE
ROOF PENETRATION

N NON-RATED GYP BD. PARTITION

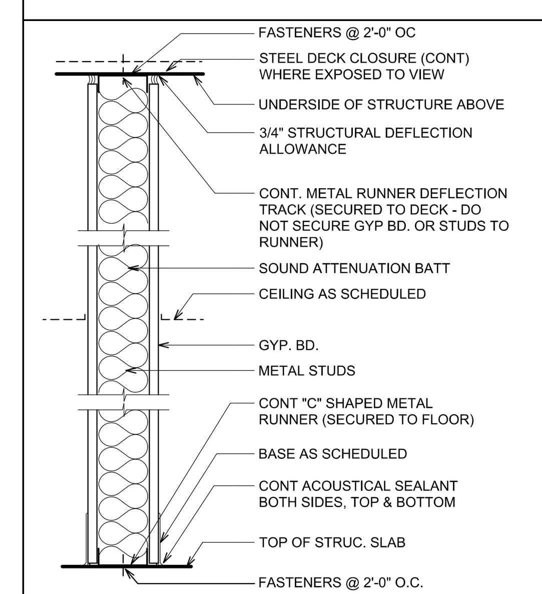

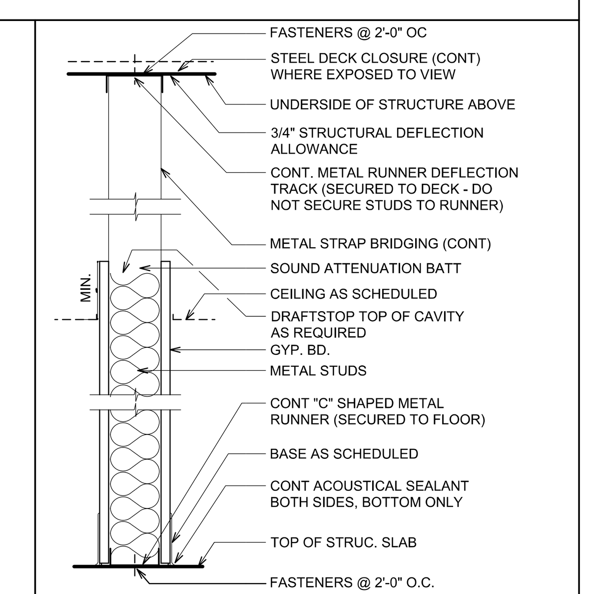

- ONE LAYER GYP BD EACH SIDE APPLIED VERTICALLY. STAGGER ALL VERTICAL JOINTS 1'-4" MIN O.C. HORIZONTAL JOINTS ARE NOT REQUIRED TO BE STAGGERED, BUT SHALL ALWAYS OCCUR ABOVE THE CEILING.

N2 NON-RATED PARTITION
- 3 5/8", 25 GA, 16" O.C. METAL STUDS
- ONE LAYER 5/8" GYP BD. EACH SIDE
- SOUND ATTENUATION BATTS
- TERMINATE PARTITION AT UNDERSIDE OF DECK
- OVERALL DIM: 4-7/8"

N3 NON-RATED PARTITION
- 6", 25 GA, 16" O.C. METAL STUDS
- ONE LAYER 5/8" GYP BD. EACH SIDE
- SOUND ATTENUATION BATTS
- TERMINATE PARTITION AT UNDERSIDE OF DECK
- OVERALL DIM: 7-1/4"

- ONE LAYER GYP BD EACH SIDE APPLIED VERTICALLY. STAGGER ALL VERTICAL JOINTS 1'-4" MIN O.C. HORIZONTAL JOINTS ARE NOT REQUIRED TO BE STAGGERED, BUT SHALL ALWAYS OCCUR ABOVE THE CEILING.

N1 NON-RATED PARTITION
- 3 5/8", 25 GA, 16" O.C. METAL STUDS
- ONE LAYER 5/8" GYP BD. EACH SIDE
- SOUND ATTENUATION BATTS
- TERMINATE PARTITION 6" ABOVE CEILING
- OVERALL DIM: 4-7/8"

R RATED GYP BD. PARTITION

TERMINATION OF RATED WALL PART IDENTIFIED ABOVE SHALL CONFORM TO UL #HW-D-0003 (1 HR AND 2 HR) TERMINATION TO METAL DECK.

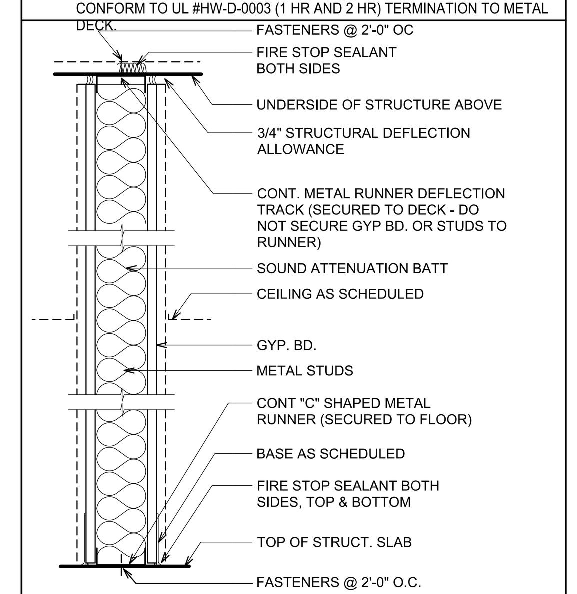

- 3 5/8" (MINIMUM) METAL STUDS AT 1'-4" MAXIMUM O.C. (UNLESS CLOSER SPACING IS INDICATED). COMPLY WITH REQUIREMENTS OF "GENERAL NOTES FOR WALLS/PARTITIONS/ BARRIERS" ABOVE.

THIS SMOKE BARRIER SHALL ALSO COMPLY WITH ALL REQUIREMENTS OF 2006 NFPA 101 LIFE SAFETY CODE SECTION 8.5 AND 2006 IBC SECTIONS 709, 712 & 713.

MINIMUM OF ONE LAYER 5/8" TYPE "X" GYPSUM BOARD EACH SIDE, APPLIED VERTICALLY. PROVIDE ADDITIONAL LAYERS OF GYPSUM BOARD WHEN REQUIRED TO OBTAIN THE INDICATED STC RATING. SEE NOTE 8 ABOVE. STAGGER ALL VERTICAL JOINTS 1'-4" MINIMUM O.C. AND STAGGER ALL HORIZONTAL JOINTS 2'-0" MINIMUM O.C. ALL HORIZONTAL JOINTS SHALL OCCUR ABOVE THE CEILING. APPLY 1" TYPE "S" STEEL SCREWS AT 8" O.C. ALONG EDGES OF BOARD AND AT 1'-0" O.C. IN THE FIELD OF THE BOARD.

SEAL GYPSUM BOARD TO FLOOR SLAB BELOW PER GENERAL NOTES 5 AND 6. EXTEND GYPSUM BOARD TO DECK ABOVE AND SEAL PER GENERAL NOTES 4 AND 7. SEAL ALL PENETRATIONS PER GENERAL NOTES 5 AND 7. *USE DETAIL 15/A8.2 "PATCHING AND SEALING PENETRATIONS IN RATED FIRE BARRIERS AND/OR RATED SMOKE BARRIERS" ONLY IF PRE-APPROVED BY ALL AUTHORITIES HAVING JURISDICTION.

R1 1 HOUR RATED PARTITION (1HR)
- 3 5/8", 25 GA, 16" O.C. METAL STUDS
- ONE LAYER 5/8" FIRE RATED TYPE X GYP BD. EACH SIDE
- SOUND ATTENUATION BATTS
- UL DESIGN NO. U465
- OVERALL DIM: 4-7/8"

R2 1 HOUR RATED PARTITION (1HR)
- 6", 25 GA, 16" O.C. METAL STUDS
- ONE LAYER 5/8" FIRE RATED TYPE X GYP BD. EACH SIDE
- SOUND ATTENUATION BATTS
- UL DESIGN NO. U465
- OVERALL DIM: 7 1/4"

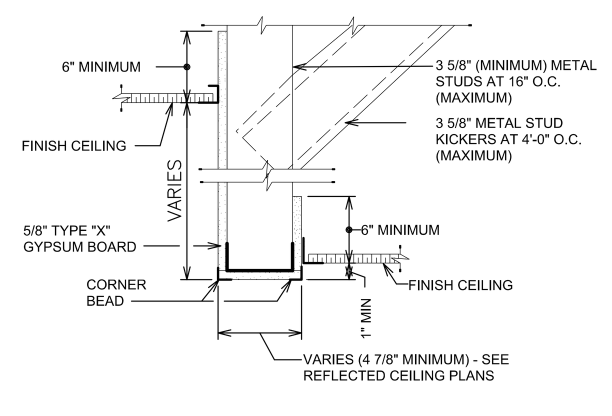

1 SECTION DETAIL BULKHEAD
12" 6" 0 1'

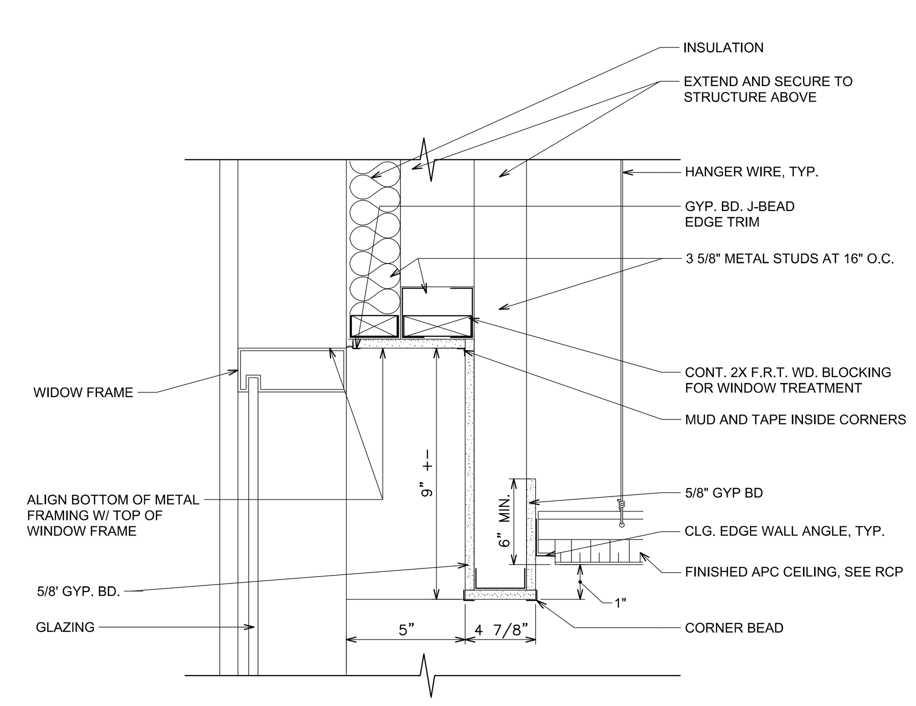

2 SECTION DETAIL WINDOW POCKET
12" 6" 0 1'

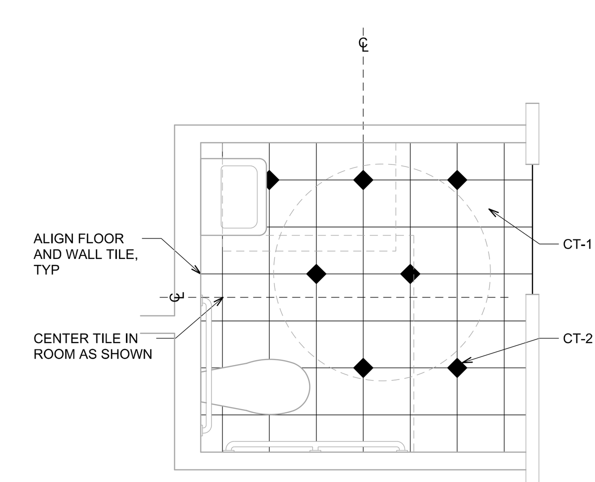

3 ENLARGED PLAN — NOT TO SCALE
TYPICAL TOILET ROOM FLOOR PATTERN

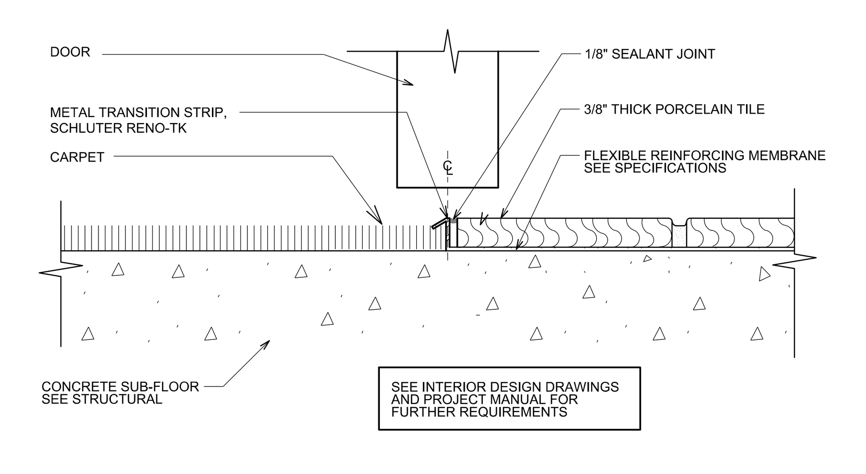

SEE INTERIOR DESIGN DRAWINGS AND PROJECT MANUAL FOR FURTHER REQUIREMENTS

4 DETAIL — NOT TO SCALE
CARPET TO PORCELAIN TILE TRANSITION UNDER DOOR

G S & P ®
Design Services For The Built Environment
Atlanta
Birmingham
Charlotte
Cincinnati
Columbus
Dallas
Fort Lauderdale
Knoxville
Jackson
Jacksonville
Louisville
Memphis
Nashville
Richmond
Tampa

GRESHAM SMITH AND PARTNERS
5220 Belfort Road
Suite 100
Jacksonville, FL 32256
904.332.6699
FIRM'S FLORIDA CERT. NO.
AAP000034/EB0003806
IB26000797

FLAGLER HOSPITAL
Excellence As A Way Of Life

IS PHASE II

CONSTRUCTION DOCUMENTS

SEAL:

HILLARY MCDONALD
ID 5463

REVISION		
No. -	Date -	Revision

DOOR SCHEDULE AND MISC DETAILS

A8.1

PROJECT:28477.01
DATE:AUGUST 31, 2012

LEV
$LNM1$ $LNM2$ $LNM3$ $LNM4$ $LNM5$
DGN $SYTIME$ $DISPLAY$ $FENCE$ $PROJECT$ $WORK$ Pages: $PAGE$ $REF1$ $REF2$ $REF3$ $REF4$ $REF5$
$INSTR$ $PLOTTER$ $DATE$ $TIME$ $SCALE$ FBL PRF TBL
$USER$